Classifying Mental Health Expressions on Social Platform into Psychological Categories with Deep Learning

Master Thesis

by

Dharshan Dhanashekar

Matriculation Number: 11038649

Supervisors

Prof. Dr. Binh Vu

Dr. Kamellia Reshadi

SRH Hochschule Heidelberg
School of Information, Media and Design
MSc Applied Data Science and Analytics

March 2026

Declaration of Authorship

I hereby declare that the Master's thesis entitled **"Classifying Mental Health Expression on Social Platform into Psychological Categories with Deep Learning"** is my own research work carried out under the academic supervision of Prof. Dr. Binh Vu and Prof. Kamellia Reshadi, and have not used any source other than those indicated –in particular, no source not named in the reference.

I have appropriately indicated any direct quotations or passages taken from literature, and the use of intellectual property from other authors, by providing the necessary citations within the work. This applies equally to the sources used for text generation by Artificial Intelligence (AI).

I hereby declare that the thesis was not previously presented to another examination board, and I also confirm that the PDF version of this thesis is exactly identical in content to the hard copy.

Signed : Dharshan Dhanashekar
Date: (to be filled)

Acknowledgements

First of all, I would like to express my deep gratitude to Prof. Dr. Binh Vu and Kamellia Reshadi who have directly guided and supported me throughout the process of writing this thesis. Their dedication, extensive knowledge, and valuable suggestions helped me to complete this thesis in the best possible way.

Furthermore, I would like to sincerely thank all the faculty members of the Applied Data Science and Analytics program at SRH Hochschule Heidelberg for providing me with a strong theoretical foundation and practical knowledge throughout my studies. The skills and insights gained during the program were invaluable for conducting this research.

I would also like to sincerely thank my family and friends for their continuous encouragement, patience, and emotional support throughout my academic journey. Their belief in me provided the motivation to overcome challenges and complete this thesis successfully.

Finally, I would like to thank all the individuals and organizations that provided me with documents, data and the necessary support to complete this thesis.

Acknowledgement of Sensitive Language

This thesis analyzes user-generated textual data collected from Reddit, where individuals openly discuss mental health–related experiences such as anxiety, panic attacks, and emotional distress. As a result, the dataset contains explicit and potentially distressing language, including profanity and references to harm or death, which reflect the raw and unfiltered nature of these discussions. The inclusion of such language is essential for preserving the authenticity and contextual integrity of the data. These expressions provide valuable insight into the emotional states and lived experiences of individuals and are therefore critical for accurate sentiment analysis and Health Belief Model–based interpretation. All instances of sensitive language were handled with care and analyzed within their contextual meaning, without sensationalism or misrepresentation. Readers are advised that the presence of such language is inherent to mental health discourse on online platforms and is addressed throughout this thesis with appropriate ethical consideration and respect.

Abstract

This thesis explores the application of transformer-based and large language models for sentiment-focused analysis of health-related discussions on Reddit using the Health Belief Model (HBM) as a conceptual framework. With the increasing volume of user-generated mental health content on online platforms, there is a growing need for automated and scalable methods to accurately interpret public sentiment and behavioral indicators embedded in textual data. This study aims to evaluate and compare the effectiveness of domain-specific and general-purpose language models for sentiment classification in a healthcare context. The research utilizes a curated dataset of Reddit posts related to mental health, which includes emotionally rich and sensitive user-generated language. A consistent preprocessing pipeline is applied, followed by single-label sentiment classification to enhance model interpretability and stability. Multiple models are implemented and evaluated, including MentalBERT, GPT-based models, and open-source large language models such as LLaMA, Mistral, and Qwen. Fine-tuning strategies and hyperparameter variations are employed to analyze their impact on classification performance.

Model performance is assessed using accuracy, macro F1-score, and weighted F1-score. The experimental results demonstrate that domain-specific transformer models achieve strong and stable performance in sentiment classification tasks, while fine-tuned open-source large language models show notable improvements over their untuned counterparts. Although proprietary models exhibit high generalization capability, challenges related to reproducibility and domain specificity remain. Overall, this thesis provides a systematic benchmarking framework for evaluating transformer-based and large language models in health-related sentiment analysis. The findings highlight the importance of domain adaptation, fine-tuning strategies, and simplified classification objectives, offering practical insights for future research in healthcare-focused natural language processing.

Table of Contents

Chapter 1. Introduction **12**
1.1 Motivation 12
1.2 Problem Statement 13
1.3 Research Questions 14
1.4 Approach 15
1.5 Thesis Contribution 16
1.6 Thesis Outline 17
Chapter 2. State of the Art **18**
2.1 Background 19
2.2 Related Work 37
2.3 Comparative Analysis of Related Work 40
2.4 Discussion and Research Gap 42
Chapter 3. Dataset and Methodology **45**
3.1 Dataset Description 45
3.2 Methodology 49
3.3 Summary 52
Chapter 4. Implementation **53**
4.1 Tools and Software Environment 53
4.2 Common Data Preprocessing Pipelines 53
4.3 Tokenization and Input Representation 59
4.4 Model Implementation 64
4.5 Summary 83
Chapter 5. Evaluation **84**
5.1 Evaluation Setup 84
5.2 Baseline Model Evaluation: TF-IDF 85
5.3 Transformer-Based Model Evaluation 86
5.4 Large Language Model Evaluation 90
5.5 Comparative Analysis and Key Findings 93
Chapter 6. Discussion and Future Works **95**
6.1 Discussion 95
6.2 Answers to Research Questions 97
6.3 Limitation 98
6.4 Future Works 100

References **102**

List of Figures

Figure 2.1 The Health Belief Model (Rosenstock, 1974)

Figure 2.2 The Health Belief Model diagram as extended by Becker (1978)

Figure 2.3 Illustration of the self-attention mechanism in transformer-based models (Vaswani et al., 2017)

Figure 2.4 Taxonomy of text representation methods (Jurafsky & Martin, 2023)

Figure 2.5 Architectural comparison of the Continuous Bag of Words (CBOW) and Skip-gram models (Mikolov et al., 2013)

Figure 2.6 Illustrative comparison of Feedforward Neural Networks (FNNs), Convolutional Neural Networks (CNNs), and Recurrent Neural Networks (RNNs) (Jurafsky & Martin, 2023)

Figure 2.7 Internal structure of a Long Short-Term Memory (LSTM) cell (Hochreiter & Schmidhuber, 1997)

Figure 2.8 Architecture of a Gated Recurrent Unit (GRU) (Cho et al., 2014)

Figure 2.9 Architecture of the BERT (Bidirectional Encoder Representations from Transformers) model (Devlin et al., 2019)

Figure 2.10 Architecture of the DistilBERT model (Sanh et al., 2019)

Figure 2.11 Architecture of the RoBERTa (Robustly Optimized BERT Pretraining Approach) model (Liu et al., 2019)

Figure 2.12 Overview of the ClinicalBERT architecture applied to sequential clinical notes (Alsentzer et al., 2019)

Figure 2.13 Architecture of MentalBERT fine-tuning for mental health disorder prediction (Ji et al., 2021)

Figure 2.14 Structural overview of the Generative Pre-trained Transformer (GPT) architecture

(Brown et al., 2020)

Figure 2.15 Overview of the architectural design of the LLaMA language model (Touvron et al., 2023)

Figure 2.16 Structural representation of the Mistral language model architecture (Jiang et al., 2023)

Figure 2.17 Structural design of the Qwen large language model (Bai et al., 2023)

Figure 4.2.1 Workflow illustrating the preprocessing procedure applied to clean and standardize Reddit textual data

Figure 4.2.2 Configuration of the sentiment classification framework used in the experiments

Figure 4.2.3 Process for organizing and consolidating labels used in the sentiment classification task

Figure 4.2.4 Data partitioning strategy showing the 80/20 training and testing split used for evaluation

Figure 4.3.1 Tokenization process applied to Reddit post text using pretrained tokenizer models

Figure 4.3.2 Generation of attention masks and application of fixed-length padding for transformer model inputs

Figure 4.3.3 Handling of token identifiers and attention masks for encoder-based transformer architectures

Figure 4.3.4 Input processing strategy for decoder-oriented large language models

Figure 4.4.1 TF-IDF feature extraction pipeline combined with logistic regression as the baseline model

Figure 4.4.2 Fine-tuning process for DistilBERT utilizing token identifiers and attention masks

Figure 4.4.3 Fine-tuning procedure for DeBERTa-v3-Base incorporating disentangled attention mechanisms

Figure 4.4.4 Integrated fine-tuning workflow applied to ELECTRA and RoBERTa architectures

Figure 4.4.5 Fine-tuning strategy for MentalBERT under limited training data conditions

Figure 4.4.6 Parameter-efficient adaptation of Phi-3.5-Mini-Instruct using the LoRA technique

Figure 4.4.7 Two-phase evaluation of the Qwen model conducted before and after task-specific fine-tuning

Figure 4.4.8 Fine-tuning experiments on the LLaMA model using different learning rate settings

Figure 4.4.9 Parameter-efficient fine-tuning approach applied to the Mistral-7B model

Figure 4.4.10 Configuration process for API key authentication

Figure 4.4.11 Prompt-based inference pipeline used for GPT-4.0 and GPT-4.1 models

List of Tables

Table 3.1.1 Description of Textual and Metadata Features in the Reddit Dataset

Table 3.1.2 Health Belief Model–Related Features Annotated in the Reddit Dataset

Table 3.1.1 Description of Textual and Metadata Features in the Reddit Dataset

Table 3.1.2 Health Belief Model–Related Features Annotated in the Reddit Dataset

Table 5.2 TF-IDF Baseline Performance Across Tasks

Table 5.3 Transformer-Based Model Performance Across Tasks

Abbreviations

AI	Artificial Intelligence
NLP	Natural Language Processing
LLMs	Large Language Models
BoW	Bag of Words
CBOW	Continuous Bag of Words
GloVe	Global Vectors for Word Representation
FNNs	Feedforward Neural Networks
CNNs	Convolutional Neural Networks
RNNs	Recurrent Neural Networks
GRU	Gated Recurrent Unit
LSTM	Long Short-Term Memory
BERT	Bidirectional Encoder Representations from Transformers
RoBERTa	Robustly Optimized BERT Approach
GPT	Generative Pre-trained Transformer
LLAMA	Language Model for Query Auto-completion
HBM	Health Belief Model
HBMS-E	Health Belief Model Scale for Exercise
HPV	Human Papillomavirus
GPU	Graphics Processing Unit

Chapter 1. Introduction

Mental health plays a crucial role in overall well-being, shaping how individuals think, feel, and respond to everyday challenges. In recent years, online platforms have increasingly become spaces where people openly share their mental health experiences, including feelings of anxiety, emotional distress, and uncertainty. While these digital discussions provide valuable insight into public mental health concerns, their large scale, unstructured format, and emotionally sensitive nature make manual analysis difficult, often leaving important patterns related to emotional well-being and behavioral beliefs underexplored. Mental health conditions are influenced not only by clinical factors but also by individuals' perceptions, beliefs, and emotional responses, which can be systematically examined through the Health Belief Model (HBM) by considering perceived severity, benefits, barriers, and coping ability. Applying this framework to large volumes of user-generated text enables a deeper understanding of how individuals interpret and respond to mental health issues in real-world settings. Advances in Natural Language Processing, particularly transformer-based and large language models, offer scalable and context-aware solutions to these challenges by enabling automated analysis of sentiment and behavioral indicators in online discussions. Building on these developments, this thesis leverages computational approaches to analyze mental health discussions on Reddit from a sentiment-focused perspective grounded in the Health Belief Model, with the aim of improving the understanding of emotional patterns and health-related beliefs expressed online and contributing to more informed and effective approaches to mental health analysis and support.

1.1 Motivation

The rapid growth of user-generated textual data on social media platforms, online forums, and online health communities has created new opportunities for understanding public perceptions, emotions, and behavioral intentions. In the healthcare domain, analyzing such textual data has become particularly important, as individuals increasingly express their opinions, fears, beliefs, and personal experiences related to health conditions and preventive behaviors through digital platforms. Extracting meaningful insights from this data can support public health authorities, researchers, and policymakers in designing more effective communication strategies and targeted interventions. One widely used theoretical framework for understanding health-related behavior is

the Health Belief Model (HBM), originally proposed by Rosenstock (1974) and later extended by Becker (1978). The HBM explains individual decision-making based on constructs such as perceived severity, perceived benefits, perceived barriers, self-efficacy, and cues to action. Traditionally, the HBM has been applied through survey-based methods and manual qualitative analysis. However, the growing volume and dynamic nature of online textual data make manual analysis increasingly impractical, time-consuming, and prone to subjectivity (Zhang et al., 2020; Guidry et al., 2021).

Recent advances in Natural Language Processing (NLP), particularly transformer-based architectures, have significantly improved the ability to analyze sentiment and semantic content in large-scale text data. Models such as BERT (Devlin et al., 2019) and its domain-adapted variants have demonstrated strong performance across various healthcare and mental health–related tasks (Alsentzer et al., 2019; Ji et al., 2021). In parallel, large language models (LLMs), including GPT-based models (Brown et al., 2020) and open-source alternatives such as LLaMA (Touvron et al., 2023), Mistral (Jiang et al., 2023), and Qwen (Bai et al., 2023), have shown promising generalization capabilities across diverse NLP tasks.

Despite these advancements, there remains limited empirical work that systematically compares domain-specific transformer models with general-purpose large language models for sentiment-focused healthcare text analysis grounded in behavioral theory. This thesis is therefore motivated by the need to evaluate and benchmark these models within a unified experimental framework while maintaining theoretical interpretability through the Health Belief Model.

1.2 Problem Statement

Although numerous machine learning and deep learning approaches have been proposed for sentiment analysis and emotion detection, several challenges remain unresolved in healthcare-related text analysis. Health-related text often contains implicit emotions, nuanced expressions, and context-dependent meanings that are difficult to capture using traditional machine learning methods or simple text representations (Pang and Lee, 2008; Mohammad and Turney, 2013). These challenges are further amplified in mental health discussions, where users frequently express distress, uncertainty, and complex emotional states (De Choudhury et al., 2013).

Furthermore, existing studies commonly rely on multi-label classification across multiple behavioral constructs, which increases model complexity and may reduce interpretability and classification stability (Guibin Chen, 2017). In the context of the Health Belief Model, this complexity can introduce additional labeling noise and limit the practical usability of automated systems.

While large language models have demonstrated impressive generalization capabilities across a wide range of NLP tasks, their comparative performance against fine-tuned, domain-specific transformer models in healthcare sentiment analysis is not yet well established. Many existing studies report results for individual models without providing a systematic benchmark across architectures, training strategies, and hyperparameter configurations (Gilardi et al., 2023). Consequently, there is a lack of a comprehensive evaluation framework that examines how different transformer-based and generative language models perform in sentiment-focused health text classification tasks grounded in the Health Belief Model.

1.3 Research Questions

To address the identified challenges, this thesis seeks to answer the following research questions:

RQ1: To what extent can transformer-based models effectively classify sentiment in health-related textual data?

RQ2: How does a single-label sentiment classification approach influence model stability and interpretability compared to multi-label methods?

RQ3: How does the performance of a domain-specific transformer model (MentalBERT) compare with general-purpose large language models in healthcare sentiment analysis?

RQ4: What is the impact of fine-tuning strategies and hyperparameter optimization on the performance of open-source large language models?

RQ5: Which model architecture provides the most appropriate balance between performance, interpretability, and computational efficiency for healthcare sentiment analysis?

1.4 Approach

To achieve the objectives of this thesis, a structured and systematic research approach is adopted, consisting of several key stages.

1. First, a comprehensive literature review is conducted to understand existing research related to the Health Belief Model, sentiment analysis, and the application of transformer-based and large language models in healthcare text analysis. This review establishes the theoretical foundation of the study and identifies gaps in current benchmarking and model comparison efforts.

2. Next, a dataset of health-related discussions is collected from Reddit, focusing on user-generated content related to mental health. The dataset is publicly available and suitable for academic research. Given the unstructured and emotionally rich nature of the data, a careful preprocessing pipeline is applied, including text cleaning, normalization, tokenization, and filtering to ensure data quality and relevance.

3. Following data preparation, the study focuses on sentiment-based single-label classification to improve interpretability and model stability. Multiple language models are then implemented and evaluated. These include a domain-specific transformer model (MentalBERT), proprietary large language models (GPT-based), and open-source large language models such as LLaMA, Mistral, and Qwen. Fine-tuning strategies and hyperparameter variations, including learning rate adjustments, are applied to selected models to analyze their impact on performance.

4. The implemented models are evaluated using standard classification metrics, including accuracy, macro F1-score, and weighted F1-score. The results are systematically compared to assess performance differences, training stability, and practical trade-offs across model architectures.

5. Finally, the findings are interpreted within the context of the Health Belief Model to understand how sentiment patterns reflect health-related beliefs expressed in online discussions. The results are reported in a structured and reproducible manner, providing insights into the suitability of different language models for healthcare sentiment analysis and highlighting directions for future research.

1.5 Thesis Contribution

This thesis makes several important contributions to academic research and practical applications in the areas of healthcare text analysis, natural language processing, and computational social science.

First, the thesis proposes a sentiment-focused reformulation of Health Belief Model–based text classification for analyzing health-related discussions on Reddit. By concentrating on single-label sentiment prediction rather than complex multi-label classification, the proposed approach improves interpretability and classification stability while preserving the theoretical grounding of the Health Belief Model. This methodological contribution addresses key limitations of existing approaches and provides a clearer framework for analyzing emotionally rich and unstructured mental health data.

Second, the thesis presents a systematic benchmarking framework that compares domain-specific transformer models with general-purpose large language models for healthcare sentiment analysis. By evaluating models such as MentalBERT alongside proprietary and open-source large language models under consistent experimental conditions, this research offers a comprehensive comparison that is largely absent from existing literature. The results provide valuable insights into the strengths, limitations, and practical trade-offs of different model architectures when applied to health-related textual data.

Third, this work provides an empirical evaluation of fine-tuning strategies and hyperparameter sensitivity for open-source large language models. Through controlled experiments, the thesis demonstrates how fine-tuning and learning rate adjustments influence model performance and training stability. These findings contribute practical guidance for researchers and practitioners seeking to adapt large language models to specialized healthcare domains.

In addition, the thesis highlights performance differences between proprietary and open-source model architectures, emphasizing considerations related to reproducibility, interpretability, and computational feasibility. This comparative analysis supports informed decision-making when selecting models for healthcare-focused sentiment analysis tasks.

Finally, the thesis delivers a reproducible experimental pipeline that integrates data preprocessing, model training, evaluation, and analysis. This pipeline can be readily extended to future research in healthcare-focused natural language processing, supporting further exploration of online health discussions and behavioral analysis.

Overall, this thesis advances current understanding of how transformer-based and large language models can be effectively applied to sentiment analysis in mental health contexts, while also providing practical methodologies and insights that are applicable to real-world healthcare communication and research.

1.6 Thesis Outline

This thesis is organized as follows. Chapter 2 presents an overview of the theoretical foundations and existing research related to healthcare text analytics, transformer architectures, and generative artificial intelligence. Chapter 3 describes the dataset and preprocessing methodology. Chapter 4 presents the proposed methodology and experimental design. Chapter 5 discusses the experimental results and comparative analysis. Finally, Chapter 6 concludes the thesis and outlines potential directions for future research.

Chapter 2. State of the Art

This chapter presents a structured review of the theoretical foundations and state-of-the-art computational techniques relevant to healthcare sentiment analysis using user-generated textual data. The discussion begins with an overview of the Health Belief Model (HBM), which serves as the primary conceptual framework for this research. The core constructs of the HBM are examined in the context of health communication, with particular attention to their applicability in analyzing public perceptions, beliefs, and emotional responses expressed in online mental health discussions.

Subsequently, this chapter introduces the characteristics of health-related textual data derived from online platforms such as Reddit. Given the unstructured, informal, and emotionally rich nature of such data, special emphasis is placed on the challenges associated with large-scale text analysis, including noise, linguistic variability, and sensitivity of content. This motivates the need for robust preprocessing strategies and advanced computational methods capable of capturing both sentiment and contextual meaning.

The chapter then reviews key approaches to text representation, outlining the evolution from traditional frequency-based methods to modern embedding techniques. These representations form the foundation for transforming raw text into machine-interpretable formats suitable for downstream analysis. Building on this, an overview of neural network–based models used in Natural Language Processing is provided, highlighting their role in learning semantic and syntactic patterns from text data.

A major focus of this chapter is the emergence of transformer-based architectures and their impact on NLP research. The underlying principles of transformer models are discussed, followed by an examination of prominent pretrained models such as BERT and its domain-adapted variants. Their relevance to healthcare and mental health text analysis is emphasized, particularly in terms of contextual understanding and sentiment detection.

In addition, the chapter explores the role of large language models in contemporary NLP applications. These models have demonstrated strong generalization capabilities and are increasingly used for text classification, benchmarking, and data annotation tasks. Their potential advantages and limitations in health-related sentiment analysis are discussed in relation to

reproducibility, interpretability, and computational cost.

Finally, the chapter addresses the importance of preprocessing and training strategies, including data cleaning, class balance considerations, and fine-tuning approaches, which play a critical role in improving model performance. The chapter concludes by synthesizing the reviewed literature and identifying key gaps that motivate the experimental framework adopted in this thesis. This review establishes a solid scholarly foundation for the methodology and experimental analysis presented in the subsequent chapters.

2.1 Background

This section presents the theoretical and methodological foundations supporting the research conducted in this thesis. It introduces the Health Belief Model as the conceptual framework for understanding health-related beliefs and behaviors expressed in online mental health discussions, highlighting its relevance to health communication and behavioral analysis. The section then outlines key text data representation techniques required to transform unstructured Reddit data into formats suitable for computational analysis, emphasizing the importance of capturing semantic and sentiment-related information from informal and emotionally rich content. An overview of neural networks and deep learning methods in Natural Language Processing is provided, leading to the discussion of transformer-based architectures that have become central to modern text analysis. In addition, the role of generative AI and large language models, such as GPT-based models and LLaMA, is briefly examined with respect to their capabilities in contextual understanding and classification tasks. Finally, essential preprocessing and training techniques, including data cleaning, tokenization, and fine-tuning strategies, are addressed, establishing the foundational knowledge required for the methodologies and experiments presented in subsequent sections of this thesis.

Health Belief Model (HBM)

The Health Belief Model (HBM), originally proposed by Rosenstock (1974) as shown in Figure 2.1 and later extended by Becker (1978) as shown in Figure 2.2, is a widely adopted psychological framework for explaining health-related decision-making. The model identifies key constructs such as perceived severity, perceived susceptibility, perceived benefits, perceived barriers, self-

efficacy, and cues to action, which collectively influence individual behavior. Traditional applications of the HBM rely heavily on survey-based instruments and manual coding.

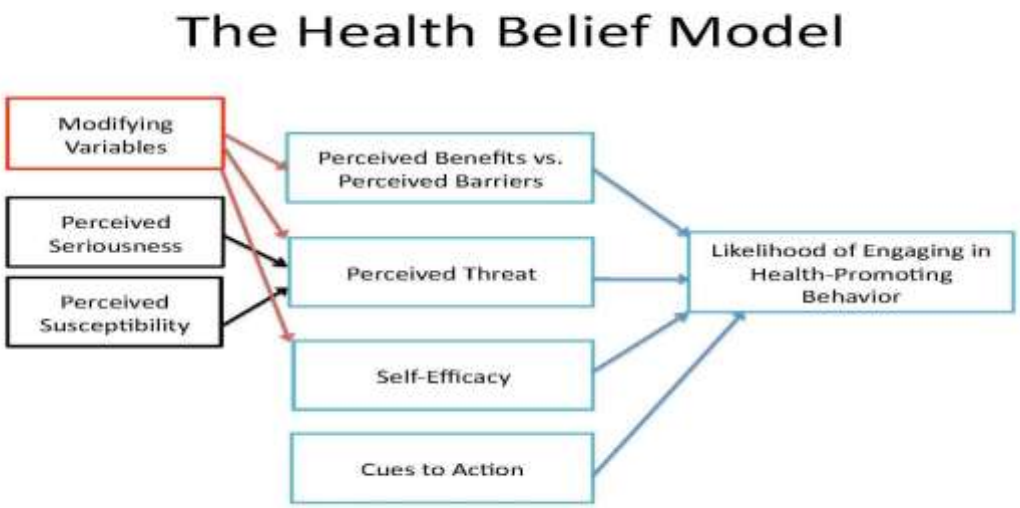

Figure 2.1 The Health Belief Model (Rosenstock, 1974)

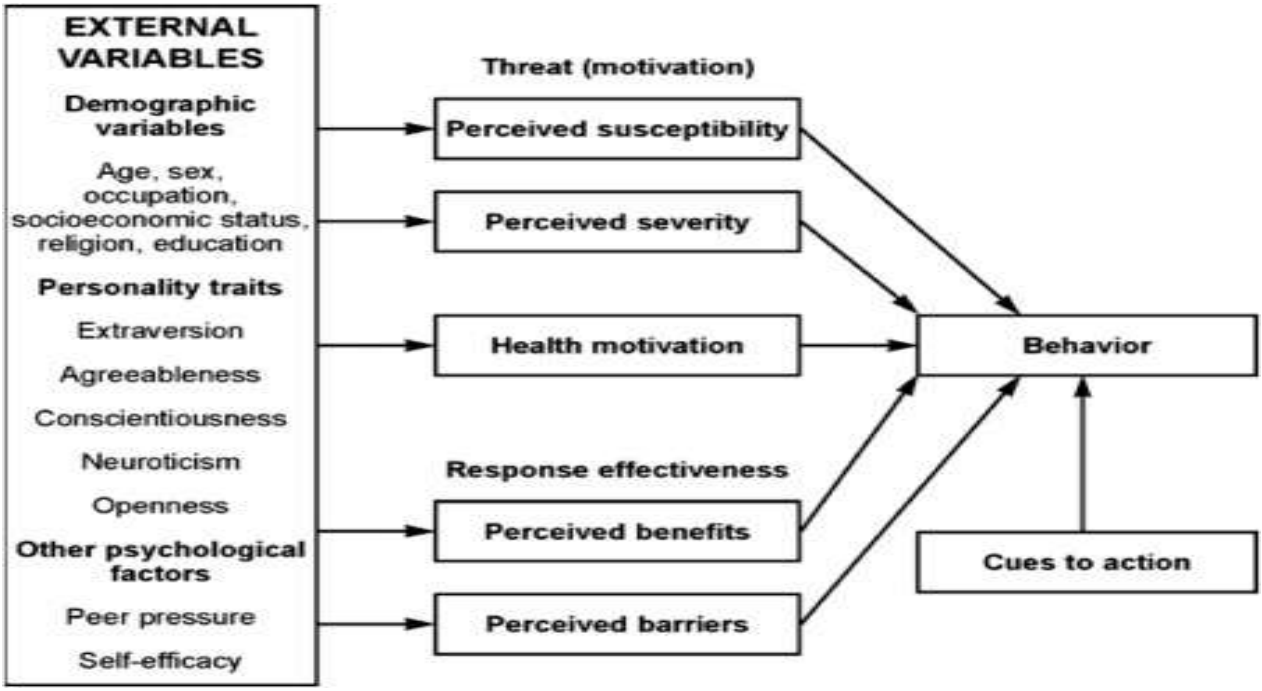

Figure 2.2 The Health Belief Model diagram as extended by Becker (1978)

Despite these advances, existing studies often require extensive manual annotation and focus on multi-label classification across multiple HBM constructs. This complexity can reduce model interpretability and introduce labeling noise. The present thesis addresses this limitation by focusing on sentiment as a central behavioral indicator linked to HBM constructs.

Mental health discussions on Reddit

This Health-related discussions on Reddit differ substantially from structured clinical records and survey-based health data. Reddit posts are written in an informal and conversational style, often containing spelling variations, slang, abbreviations, and non-standard grammar. In the context of mental health discussions, users frequently express emotions explicitly through personal narratives, rhetorical questions, and emotionally charged language. These posts may also include sensitive content related to anxiety, distress, or self-harm, reflecting the lived experiences of individuals in an unfiltered manner From a computational standpoint, Reddit data is inherently unstructured and highly diverse. Unlike clinical text, which follows standardized terminology and documentation practices, social media text lacks consistent formatting and controlled vocabulary. The length of posts varies widely, ranging from brief statements to long personal accounts, and sentiment is often conveyed implicitly rather than through explicit emotional keywords. These characteristics make traditional text analysis methods based on surface-level word frequencies less effective, as they struggle to capture context, nuance, and long-range dependencies in language (Pang and Lee, 2008). At the same time, the richness of Reddit text provides valuable contextual information that is difficult to obtain through structured data sources. Emotional tone, personal beliefs, and perceived barriers to action are often embedded within narrative content, making Reddit a suitable platform for studying health-related perceptions and behaviors at scale. However, extracting such information requires models that can interpret meaning beyond individual words and account for contextual relationships across entire sentences or posts.

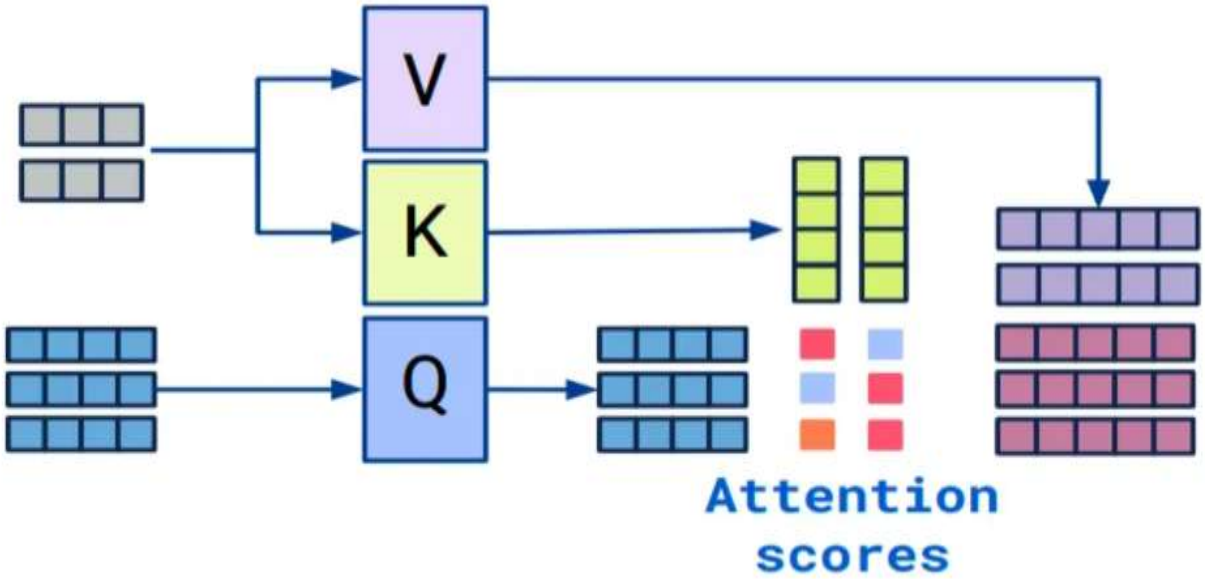

Figure 2.3 Illustration of the self-attention mechanism in transformer-based models (Vaswani et al., 2017)

These challenges motivate the use of advanced Natural Language Processing techniques, particularly transformer-based architectures. Transformer models leverage self-attention mechanisms as shown in figure 2.3 to capture global contextual relationships within text, enabling them to handle linguistic variability, informal expressions, and complex emotional cues more effectively than earlier models. As a result, transformer-based approaches have become the preferred choice for analyzing health-related social media text, where context and nuance play a critical role in understanding sentiment and behavioral signals (Devlin et al., 2019; Jurafsky and Martin, 2023).

Text Representation and Embedding Techniques

Text representation is a foundational component of natural language processing, as machine learning models operate on numerical data rather than raw text. The way textual information is represented directly influences a model's ability to learn meaningful patterns and make accurate predictions. As a result, the evolution of text representation methods has played a crucial role in advancing NLP research. Early approaches to text representation include methods such as Bag of Words (BoW) and term frequency–inverse document frequency (TF-IDF). These techniques

represent text as vectors based on word occurrence frequencies, enabling simple and computationally efficient modeling. However, BoW and TF-IDF treat words as independent units and ignore word order, semantic relationships, and contextual meaning. As a consequence, they are limited in their ability to capture subtle sentiment cues, negation, and emotional intensity, which are common in mental health–related text (Pang and Lee, 2008) as shown in Figure 2.4, early frequency-based representations such as Bag of Words and TF-IDF were later extended by prediction-based word embedding methods and, more recently, by contextualized embedding models.

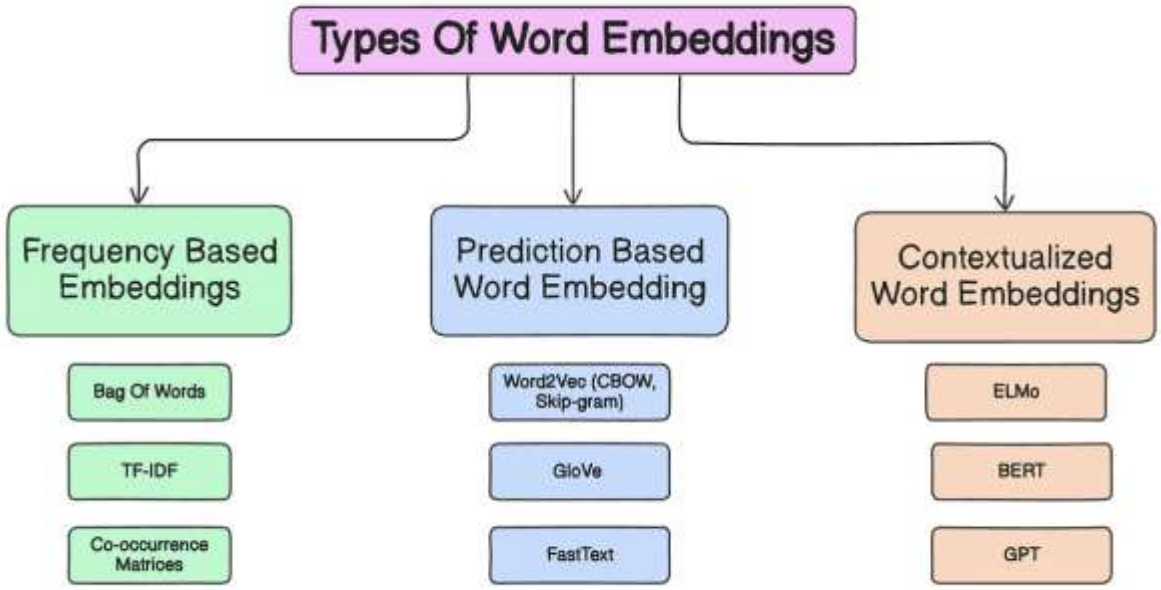

Figure 2.4 Taxonomy of text representation methods (Jurafsky & Martin, 2023)

To overcome these limitations, distributed word representations, commonly referred to as word embeddings, were introduced. Methods such as Continuous Bag of Words (CBOW), Skip-gram, and Global Vectors for Word Representation (GloVe) represent words as dense vectors in a continuous space, where semantic similarity between words is reflected by geometric proximity (Pennington et al., 2014). As illustrated in Figure 2.5, the CBOW model learns word representations by predicting a target word from its surrounding context, whereas the Skip-gram model learns by predicting surrounding context words given a target word.These embeddings allow models to capture semantic relationships such as similarity and analogy, significantly improving performance over frequency-based methods. However, traditional word embeddings assign a single fixed vector to each word, regardless of context, which limits their ability to handle

polysemy and context-dependent meaning.

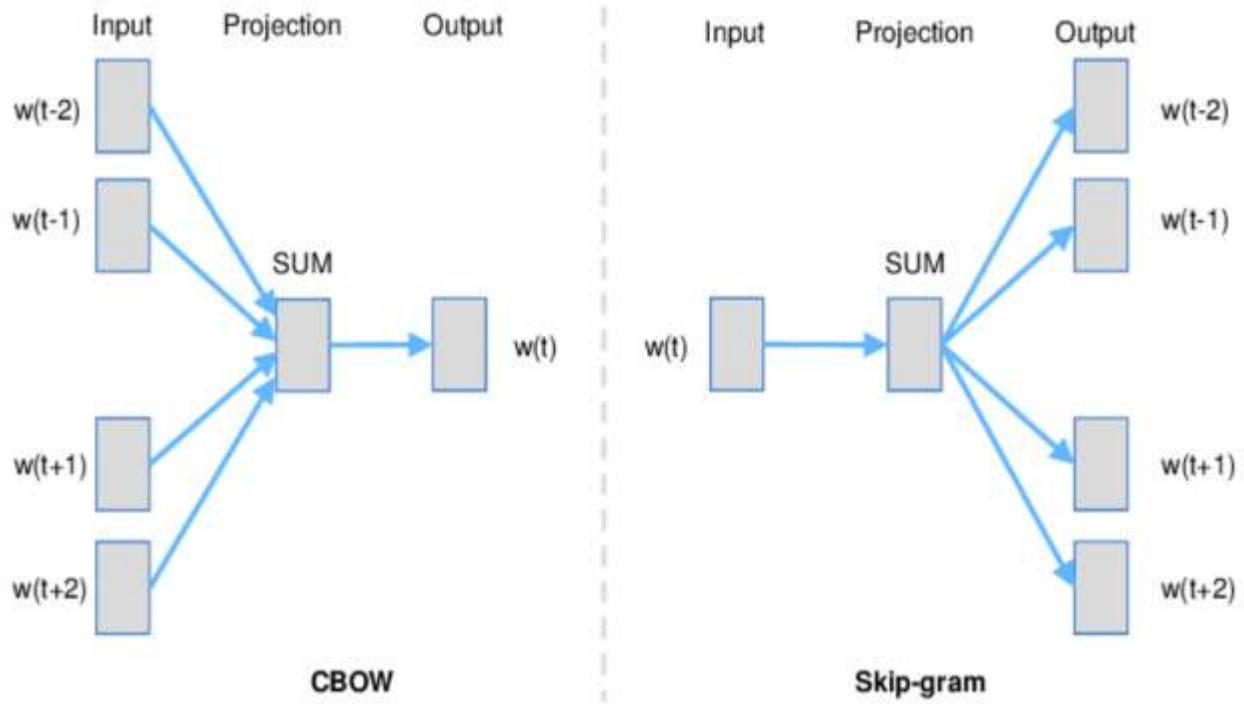

Figure 2.5 Architectural comparison of the Continuous Bag of Words (CBOW) and Skip-gram models (Mikolov et al., 2013)

Contextualized word representations address this limitation by generating word embeddings dynamically based on surrounding text. Transformer-based models, such as BERT, produce contextualized embeddings that capture both syntactic structure and semantic nuance by considering the full sentence context (Devlin et al., 2019). This capability is particularly important for analyzing mental health–related discussions, where sentiment is often expressed implicitly and word meaning can change depending on context. Given the emotionally rich and nuanced nature of mental health text, contextualized representations are especially well suited for sentiment-focused analysis. They enable models to interpret complex emotional expressions, long-range dependencies, and subtle shifts in meaning that are difficult to capture using earlier representation techniques. For this reason, contextualized embeddings form the representational foundation of the models used in this thesis and support more accurate and interpretable sentiment analysis.

Neural Networks before transformers

Before the introduction of transformer-based architectures, neural network models played a central

role in advancing text classification and sentiment analysis. These models moved beyond traditional feature-based methods by enabling automatic learning of representations directly from textual data. Among the most influential architectures are Feedforward Neural Networks (FNNs), Convolutional Neural Networks (CNNs), and Recurrent Neural Networks (RNNs), each contributing distinct modeling capabilities to early NLP system, as shown in Figure 2.6, while FNNs operate on fixed-length representations and CNNs focus on local patterns, RNNs process text sequentially, which enables modeling of temporal dependencies but limits parallelization.

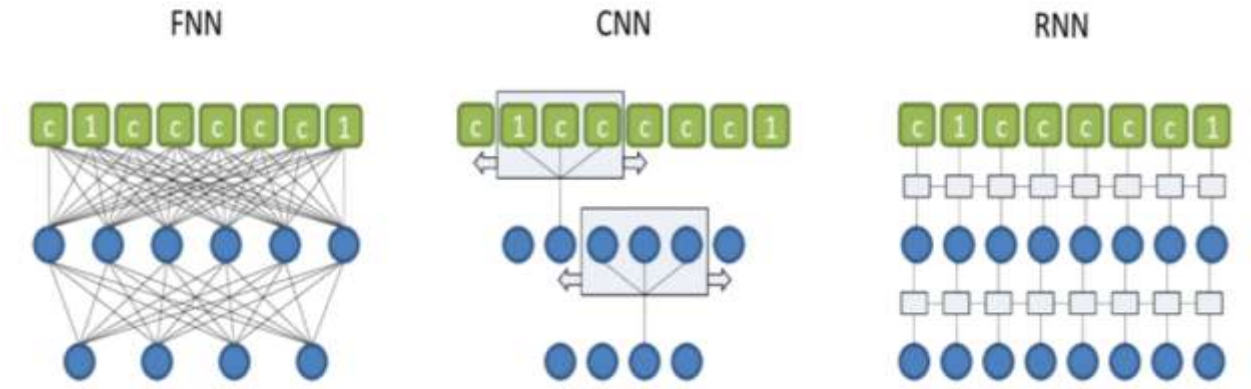

Figure 2.6 Illustrative comparison of Feedforward Neural Networks (FNNs), Convolutional Neural Networks (CNNs), and Recurrent Neural Networks (RNNs) (Jurafsky & Martin, 2023)

Feedforward Neural Networks represent one of the earliest neural approaches applied to text classification. In this approach, textual input is transformed into fixed-length numerical vectors, such as Bag-of-Words representations or word embeddings, which are subsequently processed through one or more fully connected neural network layers. In this setting, text is first converted into fixed-length vector representations, such as Bag of Words or word embeddings, which are then passed through one or more fully connected layers. FNNs are computationally efficient and easy to implement; however, they do not explicitly model word order or sequential dependencies, limiting their ability to capture contextual relationships within text (Jurafsky and Martin, 2023). Convolutional Neural Networks were later adapted for NLP tasks to address some of these limitations. CNNs apply convolutional filters over sequences of word embeddings, enabling the model to capture local patterns such as n-grams and short phrases that are indicative of sentiment or topic. This architecture has proven effective for sentence-level classification tasks due to its ability to identify salient textual features regardless of their position in the input sequence (Kim,

2014). Despite these advantages, CNNs are inherently limited to local context windows and struggle to capture long-range dependencies across entire documents.

Recurrent Neural Networks, including variants such as Long Short-Term Memory (LSTM) networks and Gated Recurrent Units (GRUs), were introduced to explicitly model sequential dependencies in text. By processing input tokens sequentially, RNN-based models can capture temporal relationships and contextual flow across sentences. LSTMs and GRUs mitigate the vanishing gradient problem present in standard RNNs, allowing them to learn longer-term dependencies (Hochreiter and Schmidhuber, 1997; Cho et al., 2014). These models achieved strong performance in many early sentiment analysis and sequence modeling tasks.However, RNN-based architectures suffer from several practical limitations. Sequential processing prevents full parallelization, leading to longer training times and reduced scalability on large datasets. Additionally, despite improvements introduced by LSTM and GRU architectures, modeling very long-range dependencies remains challenging, particularly in lengthy and complex text such as mental health narratives found on social media platforms. Figures 2.7 and 2.8 illustrate the internal gating mechanisms of LSTM and GRU models, which, while effective in controlling information flow, still rely on sequential computation and face limitations.

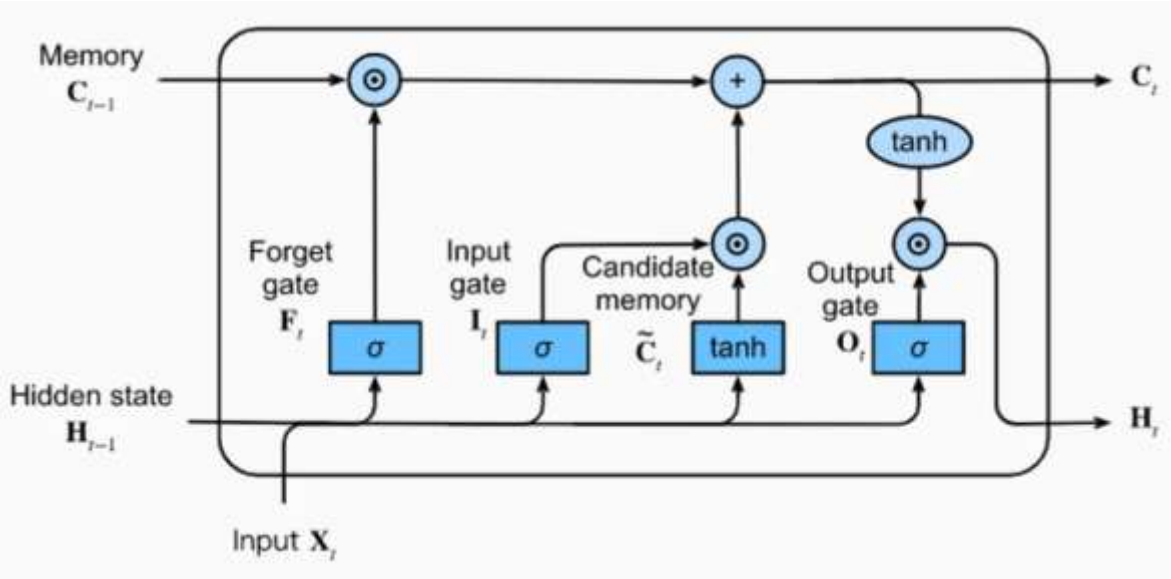

Figure 2.7 Internal structure of a Long Short-Term Memory (LSTM) cell (Hochreiter & Schmidhuber, 1997)

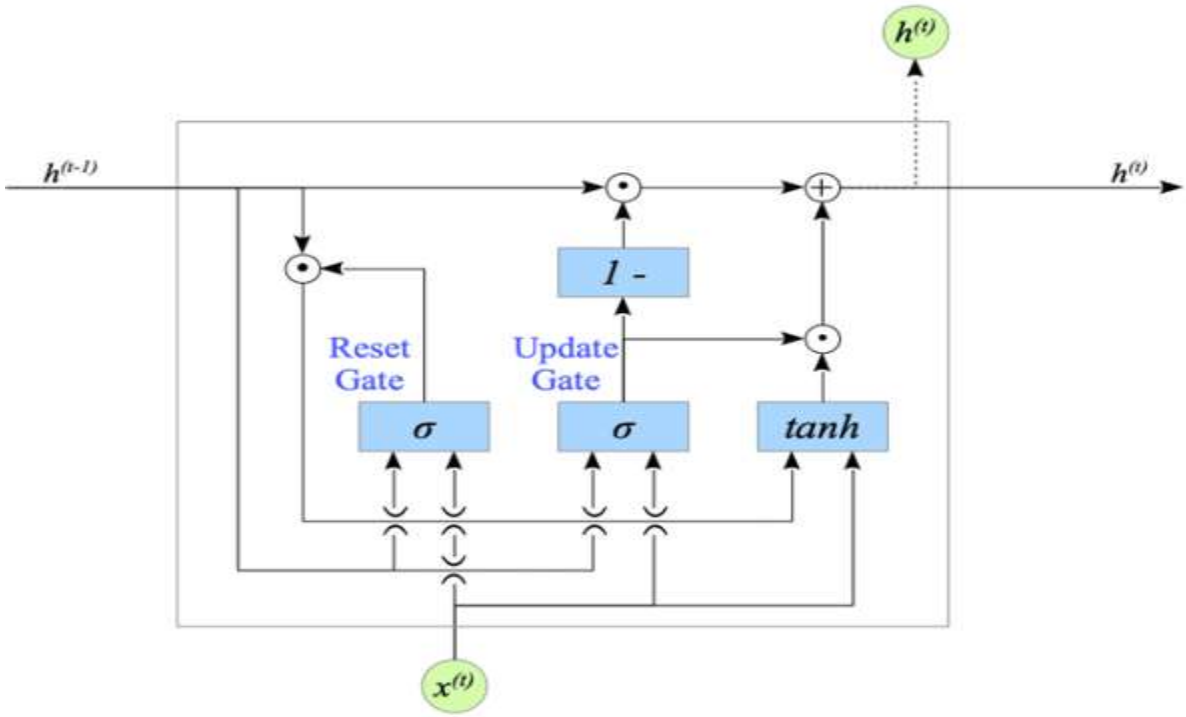

Figure 2.8 Architecture of a Gated Recurrent Unit (GRU) (Cho et al., 2014)

While FNNs, CNNs, and RNNs are not directly implemented in this thesis, they provide important historical and conceptual context for understanding the evolution of NLP models. The limitations associated with these architectures motivated the development of transformer-based models, which address many of these challenges through self-attention mechanisms and parallel computation. As such, these earlier neural models form the foundation upon which modern transformer architectures are built .Transformer architectures represent a major advancement in Natural Language Processing due to their reliance on self-attention mechanisms, which enable models to capture long-range dependencies and global contextual relationships within text. Unlike earlier sequential models, transformers process entire sequences in parallel, resulting in improved efficiency and stronger contextual understanding. As a result, pretrained transformer models have become the dominant approach for sentiment analysis and related text classification tasks in recent years (Vaswani et al., 2017).

BERT: Bidirectional Encoder Representations from Transformers

BERT, introduced by Devlin et al. (2019), represents a major advancement in transformer-based language modeling. Figure 2.9 illustrates the architecture of the BERT model, which employs a stack of bidirectional transformer encoder layers to generate contextualized word representations by jointly modeling both left and right context (Devlin et al., 2019). Unlike previous models that learn representations in a unidirectional manner, BERT is trained using bidirectional context, allowing it to capture both preceding and following information for each word in a sentence. This bidirectional understanding is achieved through two pretraining objectives: masked language modeling (MLM) and next sentence prediction (NSP). In masked language modeling, a percentage of input tokens are randomly masked, and the model learns to predict these masked tokens based on surrounding context. This forces the model to develop deep contextual representations. The next sentence prediction task trains the model to determine whether two sentences are consecutive in the original text, enabling it to learn inter-sentence relationships. BERT's encoder-only architecture makes it particularly well suited for classification tasks such as sentiment analysis. When fine-tuned, a classification head is added to the pretrained model, allowing it to map contextual embeddings to sentiment labels.

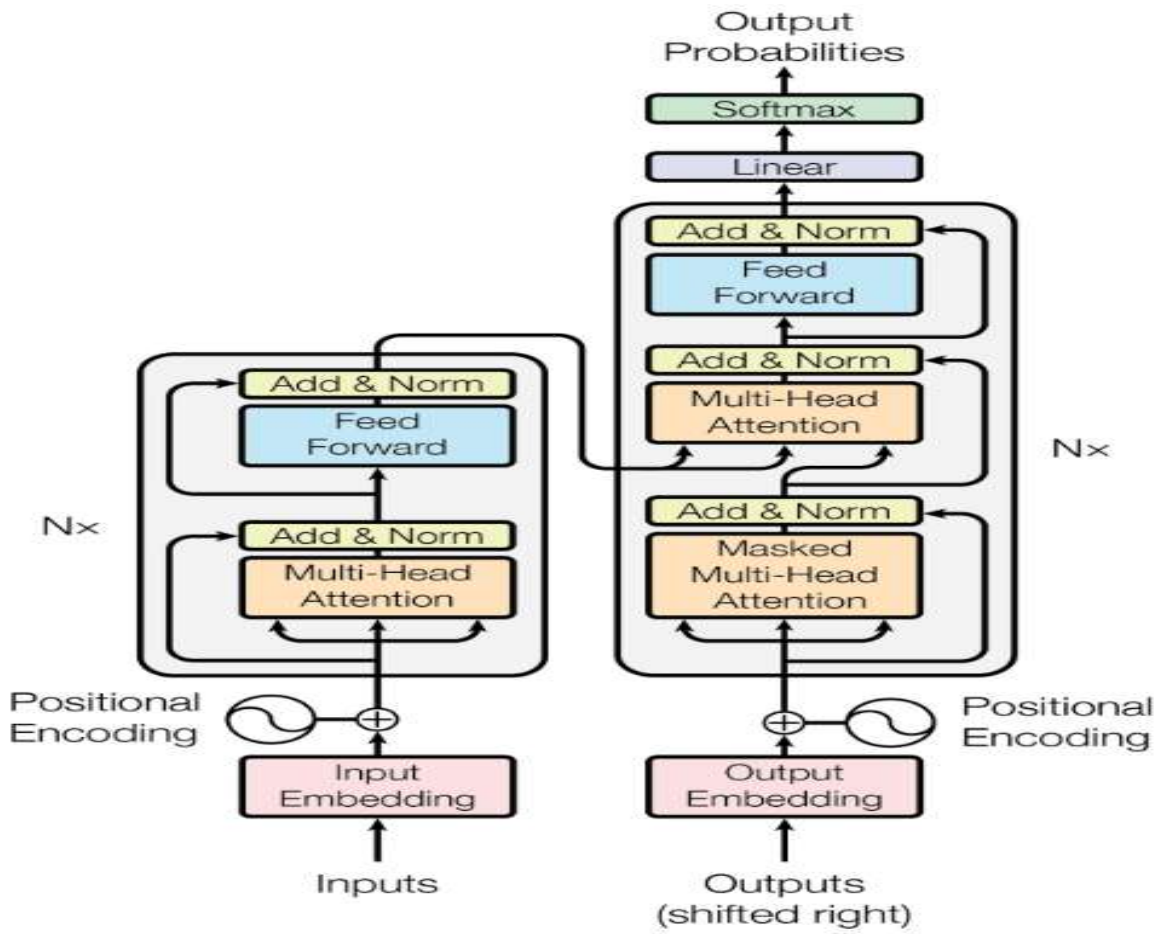

Figure 2.9 Architecture of the BERT (Bidirectional Encoder Representations from Transformers) model (Devlin et al., 2019)

DistilBERT

DistilBERT is a lightweight version of BERT proposed by Sanh et al. (2019) to address the computational limitations of large transformer models. Figure 2.1.10 illustrates the DistilBERT architecture, which preserves the core transformer encoder design of BERT while employing knowledge distillation to achieve a lighter and faster model with minimal performance degradation (Sanh et al., 2019). This method uses knowledge distillation, where a compact student model learns to replicate the behavior of a larger teacher model, such as BERT. Through this approach, DistilBERT retains approximately 95% of BERT's performance while reducing the number of parameters by nearly 40%. The reduced model size results in faster training and inference times, making DistilBERT suitable for environments with limited computational resources. However,

this efficiency gain comes at the cost of slightly reduced representational capacity. For sentiment analysis tasks, DistilBERT provides a practical balance between performance and efficiency, particularly in large-scale applications.

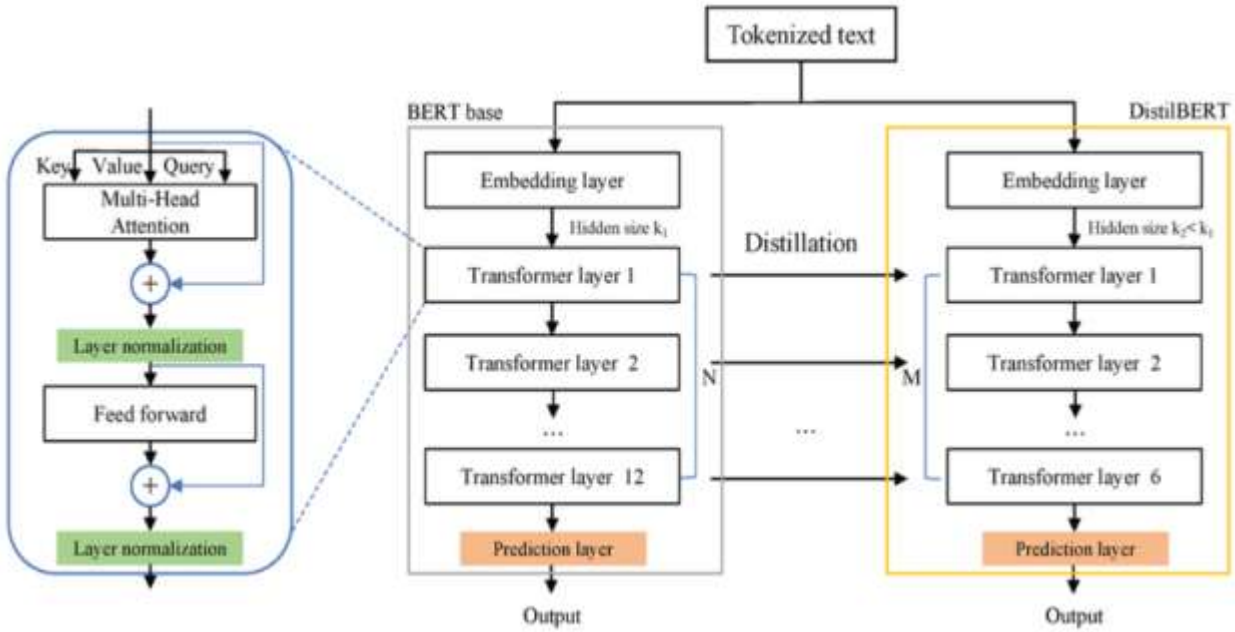

Figure 2.10 Architecture of the DistilBERT model (Sanh et al., 2019)

RoBERTa

RoBERTa, introduced by Liu et al. (2019), builds upon the BERT architecture but improves performance through optimized training strategies rather than architectural changes. Key enhancements include the removal of the next sentence prediction objective, the use of dynamic masking during training, larger batch sizes, and training on substantially larger datasets. These modifications allow RoBERTa to learn richer language representations and generalize more effectively across tasks.. Figure 2.11 illustrates the RoBERTa architecture, which retains the transformer encoder design of BERT while improving representation quality through optimized pretraining strategies such as dynamic masking and larger training corpora (Liu et al., 2019).

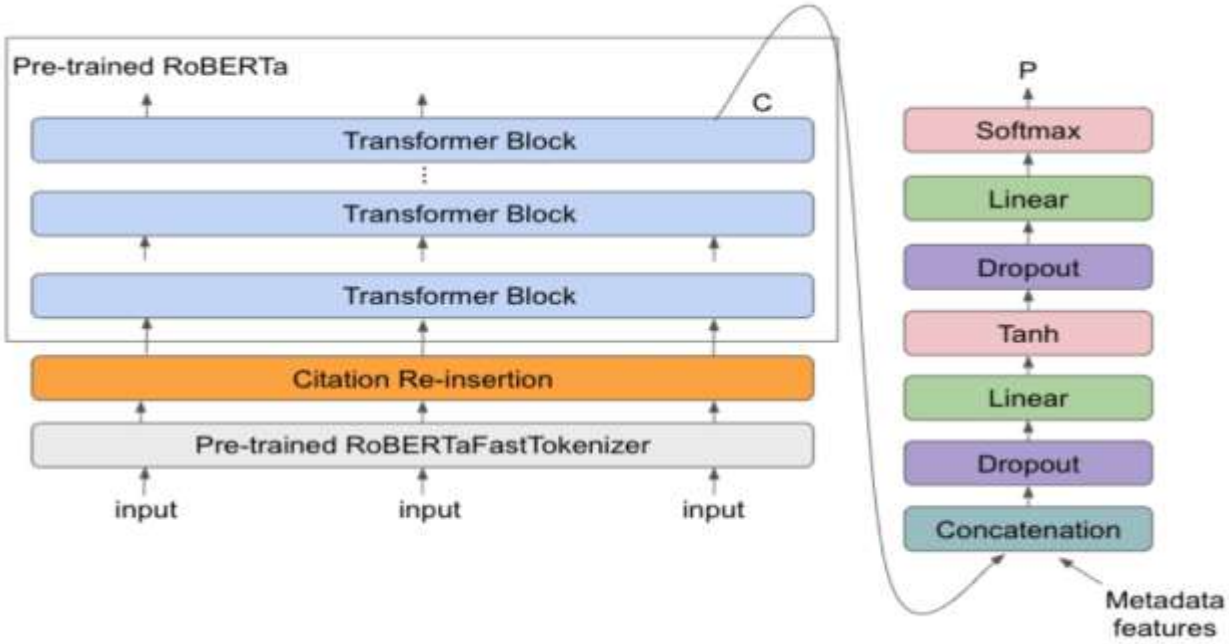

Figure 2.11 Architecture of the RoBERTa (Robustly Optimized BERT Pretraining Approach) model (Liu et al., 2019)

Domain-Specific BERT Models

While general-purpose transformer models such as BERT and RoBERTa perform well across diverse domains, their effectiveness can be limited when applied to specialized text containing domain-specific terminology and expressions. To address this limitation, domain-specific BERT variants have been developed through continued pretraining on specialized corpora.

ClinicalBERT, proposed by Alsentzer et al. (2019), is pretrained on clinical notes and biomedical text, allowing it to better capture medical terminology and clinical language patterns. Similarly, MentalBERT, introduced by Ji et al. (2021), is pretrained on large-scale mental health–related textual data sourced from online platforms. Figures 2.12 and 2.13 illustrate the architectures of ClinicalBERT and MentalBERT, respectively, showing how both models retain the standard BERT transformer encoder structure while leveraging domain-specific pretraining and fine-tuning to better capture clinical and mental health–related language . It is specifically designed to model linguistic patterns commonly found in mental health discussions, such as expressions of distress, emotional intensity, and informal language. This domain adaptation enables the model to generate more meaningful representations for mental health–related sentiment analysis.

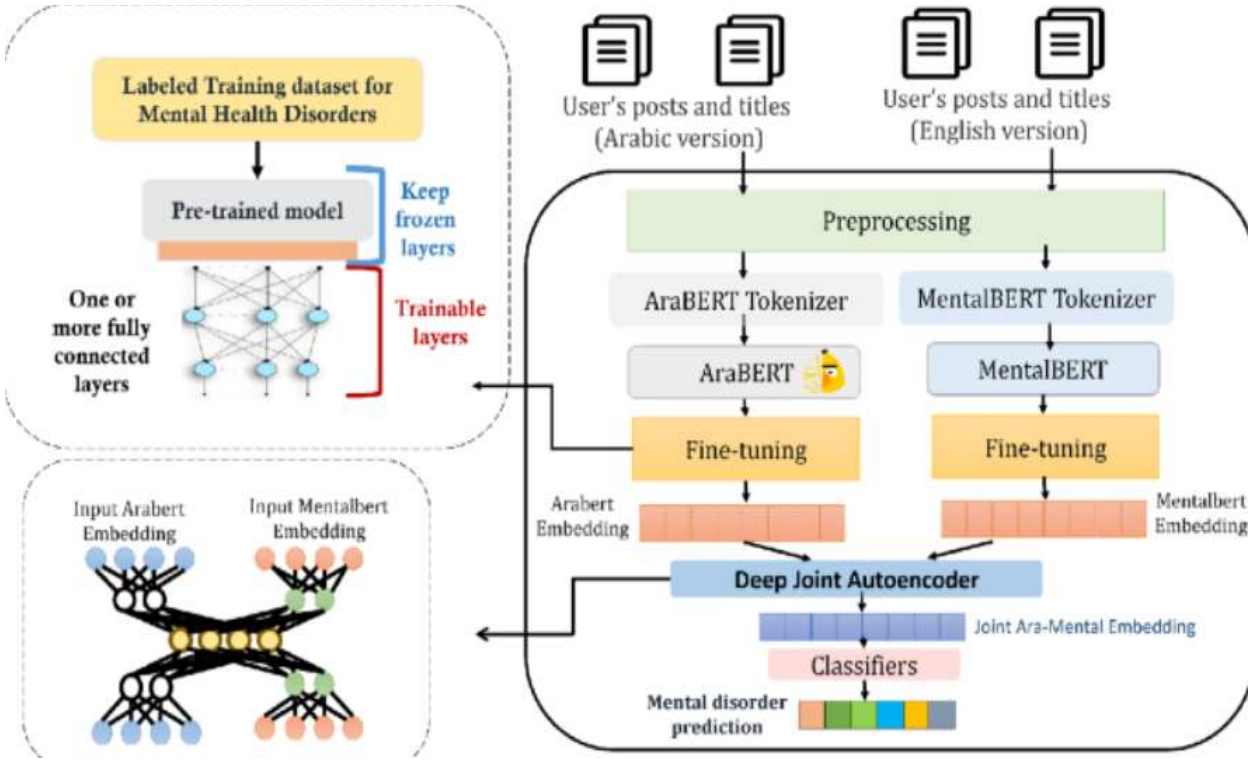

Figure 2.12 Overview of the ClinicalBERT architecture applied to sequential clinical notes (Alsentzer et al., 2019)

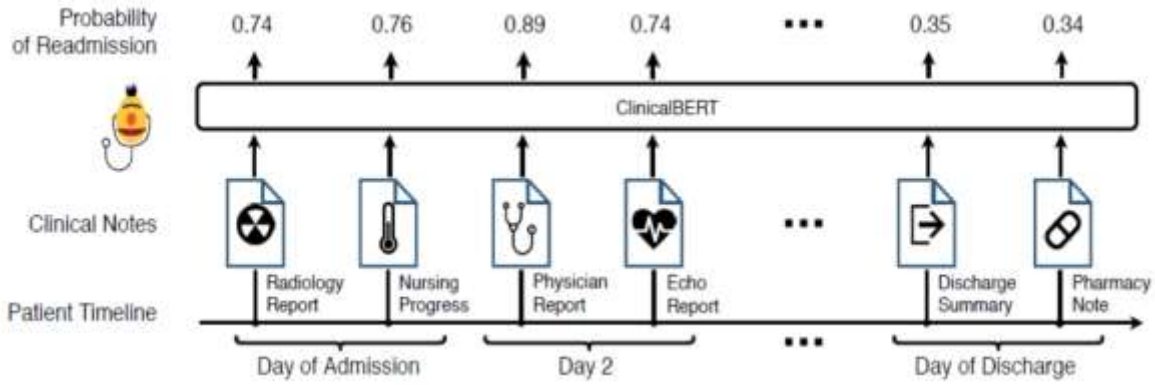

Figure 2.13 Architecture of MentalBERT fine-tuning for mental health disorder prediction (Ji et al., 2021)

Large Language Models for Text Classification

Large Language Models (LLMs) represent a significant evolution in Natural Language Processing, characterized by large-scale pretraining on diverse textual corpora and an increased capacity to generalize across tasks. Built upon transformer architectures, LLMs typically contain billions of

parameters and are trained using autoregressive or masked language modeling objectives. Unlike traditional transformer classifiers, which are primarily designed for supervised downstream tasks, LLMs can be adapted to text classification through fine-tuning or prompt-based learning, enabling flexible application across multiple domains (Brown et al., 2020). The ability of LLMs to capture complex semantic relationships, long-range dependencies, and implicit contextual cues makes them particularly suitable for sentiment analysis in unstructured and emotionally rich health-related text.

Proprietary Large Language Models

GPT-Based Models

Generative Pre-trained Transformer (GPT) models, introduced by Brown et al. (2020), are autoregressive transformer-based language models trained on large-scale text corpora. As illustrated in Figure 2.14, GPT-based models employ a decoder-only transformer architecture trained in an autoregressive manner, enabling strong contextual modeling and flexible adaptation to downstream tasks through fine-tuning or prompt-based approaches .These models generate text by predicting the next token given a sequence of preceding tokens, allowing them to learn strong contextual representations. GPT-based systems demonstrate high performance across a wide range of NLP tasks, including sentiment analysis, summarization, and question answering. In sentiment classification tasks, GPT-based models can be adapted either through fine-tuning or prompt-based approaches, where carefully designed prompts guide the model to produce classification outputs. Their strengths include strong contextual understanding, robustness to linguistic variation, and the ability to handle complex and implicit sentiment expressions commonly found in mental health discussions. Despite these advantages, proprietary GPT-based models present several limitations in academic research contexts. Restricted access to model architecture and training data limits transparency and reproducibility, while dependency on external APIs constrains experimental control. These factors make it challenging to perform systematic hyperparameter tuning or to fully replicate results, which is a key consideration in this thesis.

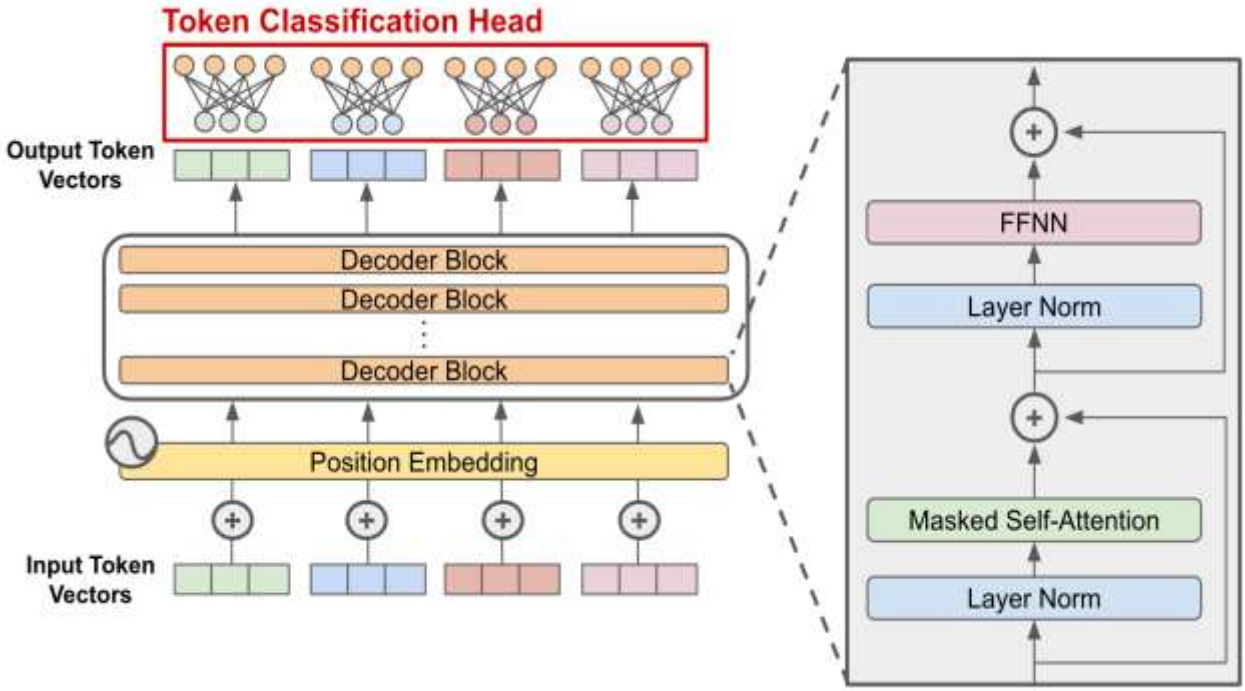

Figure 2.14 Structural overview of the Generative Pre-trained Transformer (GPT) architecture (Brown et al., 2020)

Open -Source Large Language Models

Open-source large language models provide an alternative to proprietary systems by offering full access to model architecture, weights, and training configurations. This transparency enables fine-grained experimentation, reproducibility, and deeper analysis of model behavior, which are essential for academic benchmarking.

LLaMA

LLaMA (Large Language Model Meta AI), proposed by Touvron et al. (2023), is a family of autoregressive transformer-based models designed to achieve strong performance with fewer parameters compared to earlier LLMs. Figure 2.15 illustrates the LLaMA architecture, which adopts a decoder-only autoregressive transformer design with efficiency-oriented components such as RMS normalization, grouped multi-query attention, and SwiGLU feed-forward layers, enabling stable and controlled fine-tuning for sentiment classification tasks .LLaMA models are trained on high-quality datasets and optimized for efficiency, making them suitable for research and fine-tuning on domain-specific tasks

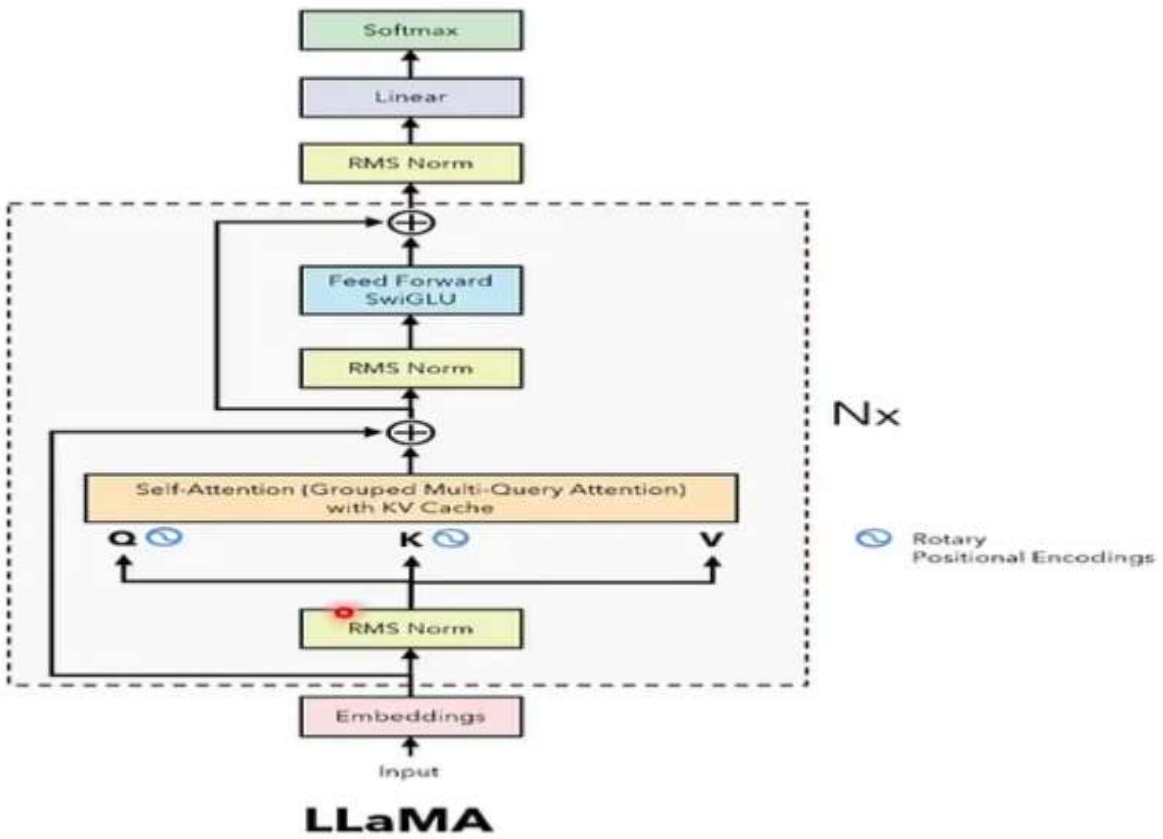

Figure 2.15 Overview of the architectural design of the LLaMA language model (Touvron et al., 2023)

Mistral

Mistral, introduced by Jiang et al. (2023), is an open-source large language model designed with a focus on efficiency and performance optimization. Figure 2.16 illustrates the Mistral architecture, which adopts a decoder-only autoregressive transformer design enhanced with grouped-query attention, sliding-window mechanisms, and mixture-of-experts feed-forward layers to improve computational efficiency and scalability. It incorporates architectural improvements such as optimized attention mechanisms to achieve competitive results with reduced computational cost. Mistral models are particularly well suited for fine-tuning and experimentation due to their balance between model size and performance. In the context of this thesis, Mistral is evaluated as a baseline open-source LLM without extensive fine-tuning, allowing comparison with both domain-specific transformers and other large language models. This comparison helps assess whether architectural efficiency alone is sufficient for effective sentiment classification in healthcare domains.

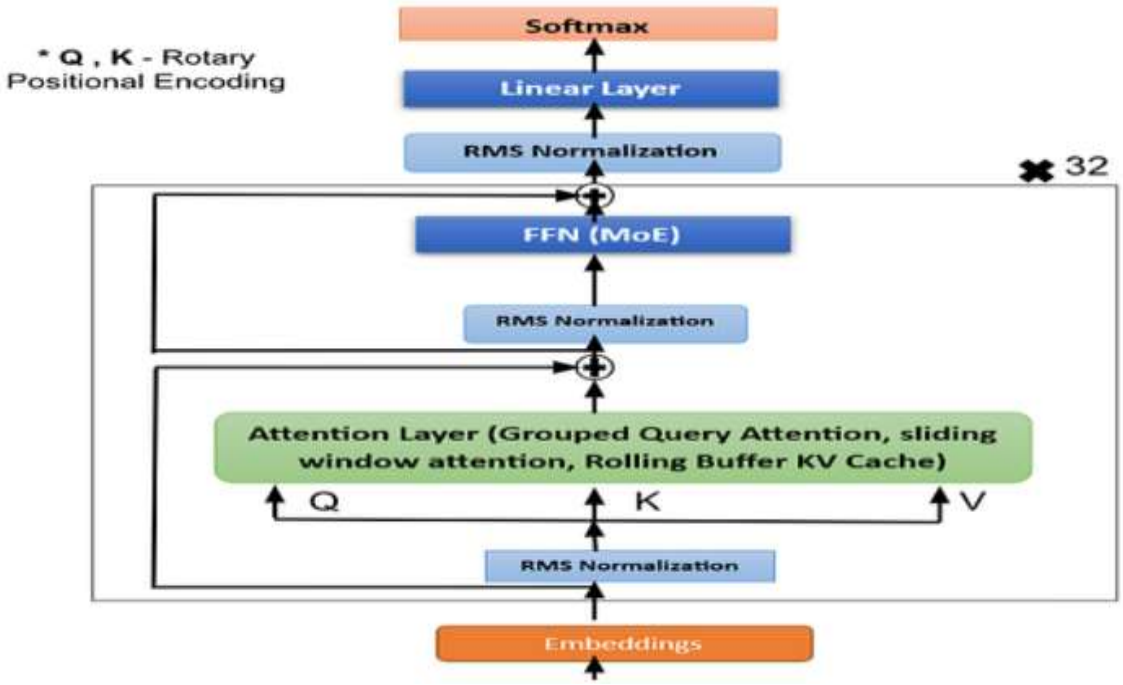

Figure 2.16 Structural representation of the Mistral language model architecture (Jiang et al., 2023)

Qwen

Qwen, proposed by Bai et al. (2023), is a family of large language models trained on multilingual and high-quality datasets, designed to support both general-purpose and task-specific NLP applications. Qwen models as shown in figure 2.17 are optimized for adaptability and demonstrate strong performance across various text generation and classification tasks.

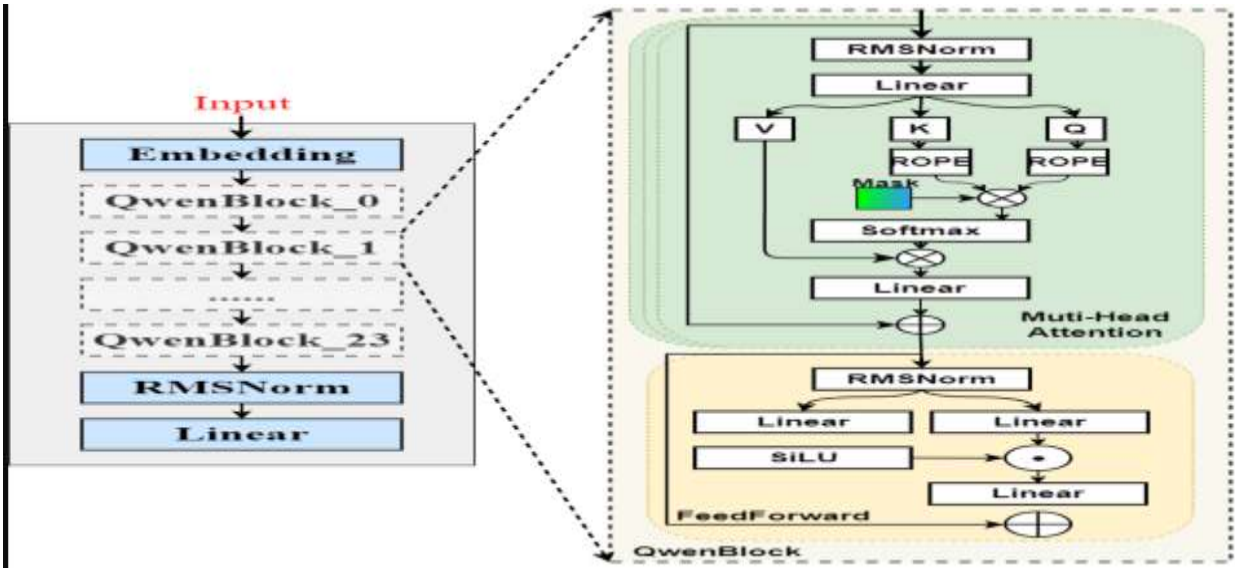

Figure 2.17 Structural design of the Qwen large language model (Bai et al., 2023)

2.2 Related Work

Applying the Health Belief Model to Online Text

The Health Belief Model (HBM) has been widely used in public health research to explain health-related decision-making and behavioral responses. Traditionally, HBM constructs have been operationalized using survey instruments and manual coding approaches. With the rapid growth of digital health communication, researchers have increasingly explored computational methods to extend HBM-based analysis to large-scale textual data. These efforts aim to capture public perceptions, beliefs, and emotional responses expressed in online platforms using automated techniques. Several studies have demonstrated the feasibility of extracting HBM constructs from social media text. Zhang et al. (2020) analyzed COVID-19–related Twitter data to identify health belief dimensions using supervised machine learning models, showing that theoretical constructs such as perceived severity and susceptibility can be inferred from short-form user-generated content. Similarly, Guidry et al. (2021) applied sentiment analysis and topic modeling techniques to examine vaccine hesitancy narratives framed within the HBM. These studies illustrate the potential of integrating psychological health behavior theories with computational text analysis. However, existing HBM-based computational approaches often rely on multi-label classification across multiple constructs and require extensive manual annotation. Such complexity increases labeling noise and reduces model interpretability, particularly when applied to informal and emotionally rich social media data. These limitations motivate alternative approaches that retain theoretical relevance while reducing annotation overhead and improving robustness.

Mental Health Research on Social Media

A growing body of research has examined mental health–related discourse on online platforms, highlighting their value as complementary data sources to clinical records and surveys. Social media environments provide opportunities for individuals to express emotional distress, personal struggles, and mental health concerns in an unfiltered and spontaneous manner. Prior studies have shown that anonymity and peer support mechanisms encourage candid self-disclosure, particularly in mental health–focused communities. De Choudhury et al. (2013) demonstrated that linguistic patterns in social media posts can be indicative of mental health states, enabling large-scale analysis of psychological well-being. Similarly, Crowston et al. (2011) observed that online peer-support communities foster open emotional expression and sustained engagement among users

experiencing psychological distress. These findings have established platforms such as Reddit as valuable resources for studying mental health perceptions and behaviors at scale. Despite their richness, social media texts pose significant challenges for computational analysis due to informal language, spelling variations, slang, and implicit sentiment expression. These characteristics have driven the adoption of advanced NLP techniques capable of capturing contextual meaning and emotional nuance beyond surface-level word statistics.

Transformers in Healthcare Text Analysis

The introduction of transformer-based architectures has significantly advanced natural language processing in healthcare and mental health applications. Models such as BERT leverage self-attention mechanisms to generate contextualized word representations by jointly modeling both left and right context. This capability has proven particularly effective for analyzing healthcare text, where sentiment and meaning are often conveyed implicitly. Empirical studies have reported strong performance of BERT on healthcare-related NLP tasks, including clinical text classification and sentiment analysis of patient-generated content. Its bidirectional encoding enables improved interpretation of complex emotional expressions and contextual dependencies compared to earlier neural architectures. Building upon BERT, RoBERTa introduced optimized pretraining strategies, including dynamic masking, larger batch sizes, and training on substantially larger corpora. As a result, RoBERTa has consistently outperformed BERT across multiple NLP benchmarks, including sentiment analysis tasks involving subtle linguistic variations (Liu et al., 2019). These advances highlight the importance of contextualized representations for healthcare sentiment analysis. However, the extent to which performance gains generalize across datasets and domains varies across studies, underscoring the need for systematic evaluation.

Domain-Specific Transformer Models

While general-purpose transformer models perform well across diverse tasks, their effectiveness can be limited when applied to specialized domains with distinct linguistic characteristics. To address this limitation, domain-specific transformer variants have been proposed through continued pretraining on specialized corpora. ClinicalBERT, introduced by Alsentzer et al. (2019), is pretrained on clinical notes and biomedical text, enabling improved modeling of medical

terminology and clinical language patterns. Similarly, MentalBERT, proposed by Ji et al. (2021), is pretrained on large-scale mental health–related textual data sourced from online platforms. These models are designed to better capture domain-specific expressions, including emotional intensity, distress signals, and informal language commonly found in mental health discussions. Prior research suggests that domain-adapted models can offer improved representation quality for healthcare sentiment analysis compared to general-purpose transformers. However, many studies evaluate such models in isolation or against limited baselines, making it difficult to draw consistent conclusions regarding their comparative advantages.

Sentiment Analysis with Large Language Models

Large language models (LLMs) represent a further evolution in NLP, characterized by large-scale pretraining and increased generalization capability across tasks. GPT-based models, introduced by Brown et al. (2020), employ autoregressive transformer architectures and have demonstrated strong performance across a wide range of NLP applications, including sentiment analysis and text classification. These models can be adapted through fine-tuning or prompt-based inference, offering flexibility in downstream tasks. In addition to proprietary systems, open-source large language models such as LLaMA, Mistral, and Qwen have gained attention due to their accessibility and suitability for controlled experimentation. Recent studies have explored fine-tuning strategies for these models, showing that training configurations and hyperparameter choices can significantly influence performance and stability in sentiment classification tasks. Such findings highlight the importance of systematic experimentation when adapting LLMs to healthcare-related text analysis.

Methodological Limitations in Prior Research

Despite the promising performance of advanced language models, reproducibility remains a major concern in healthcare NLP research. Proprietary LLMs often provide limited access to training data, architectural details, and hyperparameter configurations, restricting transparency and experimental control. These limitations make it difficult to replicate results or conduct systematic comparative evaluations. In contrast, open-source models offer greater reproducibility and flexibility, enabling detailed analysis of training dynamics and hyperparameter sensitivity. Recent

literature emphasizes the importance of transparent benchmarking frameworks that evaluate models under consistent conditions, particularly in sensitive domains such as healthcare where methodological rigor is essential.

2.3 Comparative Analysis of Related Work

Use of the Health Belief Model in Existing Research

While prior research has made significant progress in applying computational methods to health-related sentiment analysis, notable differences exist in how theoretical frameworks are operationalized. From a theoretical perspective, many HBM-based studies emphasize multi-label classification of individual constructs such as perceived severity, susceptibility, and perceived barriers. This approach enables detailed behavioral analysis and fine-grained theoretical interpretation. However, it often requires extensive manual annotation and complex labeling schemes, particularly when applied to large-scale social media data. Such complexity can introduce annotation noise and reduce interpretability, limiting the scalability of these approaches. In contrast, sentiment-focused methods provide a more tractable alternative by capturing an aggregate behavioral signal that reflects underlying beliefs and emotional states. This comparison highlights a fundamental trade-off observed in existing HBM-driven computational studies between theoretical granularity and practical feasibility.

Modeling Approaches in Previous Studies

In terms of modeling approaches, earlier studies predominantly relied on traditional machine learning methods or pre-transformer neural architectures, including convolutional and recurrent neural networks. Although these models achieved reasonable performance in sentiment classification tasks, they were limited in their ability to capture long-range contextual dependencies and nuanced emotional expressions commonly present in mental health discourse. Transformer-based models, such as BERT and RoBERTa, address many of these limitations through self-attention mechanisms and contextualized representations. As a result, they have demonstrated improved performance in healthcare-related NLP tasks. Nevertheless, the extent to which these performance gains generalize across different domains, datasets, and experimental

conditions varies substantially across studies, making direct comparison challenging.

Domain Adaptation in Language Models

While Another important dimension of comparison concerns domain adaptation. General-purpose transformer models are typically trained on large, heterogeneous corpora and may struggle to fully capture domain-specific linguistic patterns found in mental health discussions. To address this limitation, domain-adapted models such as ClinicalBERT and MentalBERT have been proposed through continued pretraining on specialized corpora. Prior research suggests that domain-specific models can offer improved representation quality for healthcare-related text. However, existing studies often evaluate these models in isolation or against a limited set of baselines. This fragmented evaluation strategy makes it difficult to draw consistent conclusions regarding the comparative advantages of domain-adapted transformers over general-purpose models.

Large Language Models and Reproducibility Considerations

Recent work has increasingly explored the use of large language models for sentiment analysis and related text classification tasks. Proprietary models, particularly GPT-based systems, have demonstrated strong generalization capabilities across a wide range of NLP benchmarks. Despite their performance, restricted access to training data, architectural details, and hyperparameter configurations presents challenges for transparency, reproducibility, and systematic comparison. In contrast, open-source large language models such as LLaMA, Mistral, and Qwen offer greater experimental flexibility and transparency. These models enable controlled fine-tuning and detailed analysis of training dynamics. However, comparative evaluations between open-source LLMs, domain-specific transformers, and general-purpose transformer models remain limited in the existing literature.

Experimental Design and Benchmarking Practices

Differences in experimental design and evaluation practices further complicate comparison across prior studies. Many works employ dataset-specific preprocessing pipelines, varying evaluation metrics, and inconsistent fine-tuning strategies, making cross-study performance comparisons

unreliable. Inconsistent handling of class imbalance and limited reporting of hyperparameter configurations contribute to fragmented and sometimes conflicting findings. These limitations underscore the need for a unified benchmarking framework that evaluates diverse model families under consistent experimental conditions and across both quantitative and qualitative dimensions. Such a framework is essential for enabling fair comparison and for identifying meaningful trade-offs among modeling approaches in healthcare sentiment analysis.

2.4 Discussion and Research Gap

Limitations of Existing Theory-Based Studies

The review and comparative analysis of existing literature reveal several important gaps and limitations in current approaches to health-related sentiment analysis using social media text. Although prior studies demonstrate the feasibility of applying computational methods and advanced language models to healthcare data, challenges remain in terms of theoretical integration, experimental consistency, and practical applicability. Addressing these challenges is essential for developing robust, interpretable, and reproducible sentiment analysis frameworks for mental health research. One key limitation in existing HBM-based computational studies is the reliance on complex multi-label annotation schemes to model individual health belief constructs. While such approaches provide fine-grained theoretical insight, they often require extensive manual labeling and introduce annotation noise, particularly when applied to large-scale and informal social media data. As a result, both model interpretability and scalability are frequently compromised. This highlights the need for alternative modeling strategies that preserve theoretical relevance while reducing annotation complexity and improving robustness.

Gaps in Model Comparison Studies

From a modeling perspective, much of the existing literature focuses on evaluating individual models or narrow model families in isolation. Although transformer-based models and domain-specific variants have demonstrated strong performance in healthcare NLP tasks, systematic comparisons across general-purpose transformers, domain-adapted models, and large language models remain limited. This fragmentation restricts the ability to draw consistent conclusions

regarding the relative strengths, limitations, and trade-offs of different model architectures when applied to mental health–related sentiment analysis. Without unified evaluation, it is difficult to determine whether observed performance gains arise from architectural advantages, domain adaptation, training strategies, or dataset-specific factors. This gap motivates the need for structured and controlled comparative analysis across diverse model categories.

Reproducibility Challenges in Existing Studies

Another significant gap lies in experimental design and evaluation practices adopted in prior work. Many studies employ dataset-specific preprocessing pipelines, heterogeneous evaluation metrics, and varying fine-tuning strategies, which hinder meaningful cross-study comparison. In addition, limited reporting of hyperparameter configurations and training dynamics further reduces reproducibility and transparency. These issues are particularly critical in healthcare research, where methodological rigor and reproducibility are essential for building trust in computational findings. The absence of standardized benchmarking practices contributes to fragmented and sometimes conflicting results across the literature.

Accessibility challenges in Large Language Models

The growing use of proprietary large language models introduces additional challenges related to accessibility and reproducibility. While such models demonstrate strong generalization capabilities, restricted access to training data, architectural details, and hyperparameter controls limits their suitability for systematic academic evaluation. These constraints make it difficult to conduct controlled experiments or fully replicate reported results. In contrast, open-source large language models offer greater experimental flexibility and transparency. However, despite their potential, they remain underexplored in controlled comparative studies within healthcare sentiment analysis, particularly with respect to fine-tuning strategies and hyperparameter sensitivity.

Research Motivation of the Present Thesis

Taken together, these gaps highlight the need for a unified and transparent benchmarking framework that evaluates diverse model families under consistent experimental conditions. There

is a clear opportunity to systematically examine the impact of domain adaptation, fine-tuning strategies, and hyperparameter selection on sentiment classification performance using mental health–related social media data. By addressing these gaps, the present thesis aims to contribute a reproducible and theory-informed evaluation of transformer-based and large language models for healthcare sentiment analysis. This approach bridges the divide between theoretical relevance and practical applicability and provides a structured foundation for the experimental methodology presented in subsequent chapters.

Chapter 3. Dataset and Methodology

This chapter describes the dataset used in this research and the methodological framework adopted for sentiment-focused analysis of health-related discussions on Reddit. The chapter first presents the data source and its key characteristics, followed by an overview of the preprocessing steps applied to prepare the data for analysis. It then outlines the modeling methodology, including data preparation, training strategy, and evaluation approach. The aim of this chapter is to provide a clear and reproducible description of how the data and methods support the research objectives of this thesis.

3.1 Dataset Description

Data Source

The dataset used in this study consists of user-generated posts collected from Reddit, a large online discussion platform where individuals frequently share experiences related to mental health. The data originates from five mental health–related subreddits: anxiety, loneliness, mentalhealth, suicidewatch, and depression. The dataset spans posts created between 2019 and 2022 and was collected in 2022 as part of prior research. Reddit data is particularly suitable for this study due to its anonymous nature, which encourages open and emotionally expressive discussions. This makes the dataset highly relevant for sentiment analysis and the examination of health-related beliefs. In addition to the raw dataset, a smaller annotated subset was available, in which posts were labeled according to perceived mental health root causes. This labeled data served as a reference point for understanding content structure but was not sufficient in scale to support comprehensive Health Belief Model analysis. Consequently, this thesis extends beyond the original annotations by focusing on sentiment-focused modeling and large-scale computational analysis.

Dataset Characteristics

The raw dataset contains textual and metadata fields associated with Reddit posts. The primary textual content is provided through the post title and body text, which together form the basis for sentiment analysis. Metadata such as subreddit and post score provide contextual information but are not used as predictive features in the modeling process. Given the unstructured and informal nature of Reddit text, the dataset includes emotionally charged language, slang, and varying text lengths. To ensure analytical relevance, posts with very limited textual content were excluded, as short posts do not provide sufficient contextual information for reliable sentiment classification.

Feature Selection

For the purposes of this thesis, the analysis focuses primarily on the following features:

- **Title**: The headline of the Reddit post
- **Selftext**: The main textual content of the post
- **Subreddit**: The community in which the post was published

Other available attributes, such as author name, timestamps, and post score, were retained for reference but not included in the modeling pipeline, as the focus of this research is on textual sentiment rather than user behavior or engagement metrics.

Feature Description

This subsection describes all features (columns) included in the dataset used for analysis is provided in Table 3.1. The dataset consists of Reddit posts enriched with annotations related to sentiment and Health Belief Model (HBM) constructs. These features enable both linguistic analysis and theory-driven interpretation of mental health discussions.

Column Name	Description
title	The title of the Reddit post, often reflecting the main concern or emotional state of the user.
selftext	The main textual content of the post, containing detailed descriptions of experiences, emotions, and mental health concerns. This column serves as the primary input for sentiment analysis and model training.
subreddit	The subreddit community where the post was published (e.g., anxiety, depression, suicidewatch), providing contextual information about the discussion topic.
score	The net score of the post (upvotes minus downvotes), representing community engagement. This feature is retained for reference but not used for prediction.
created_utc	The UTC timestamp indicating when the post was created.
timestamp	A human-readable date and time representation derived from the UTC timestamp.
author	The username of the post author. This feature is not used in modeling to preserve anonymity and avoid user-specific bias.

Table 3.1.1 Description of Textual and Metadata Features in the Reddit Dataset

Health Belief Model-Related Features

The dataset includes several annotated columns corresponding to the constructs of the Health Belief

Model as shown in Table 3.1.2 .These features enable theory-driven analysis of how individuals perceive and respond to mental health challenges.

Column Name	**Description**
sentiment	The overall emotional polarity expressed in the post (e.g., positive, neutral, negative), used as the primary prediction target in this thesis.
root_cause	The perceived underlying cause of the mental health concern as expressed by the user (e.g., personality, trauma and stress, early life experiences, substance use).
perceived_severity	Indicates how serious or intense the user perceives their mental health condition to be, often reflected through language expressing distress or urgency.
perceived_benefits	Represents the perceived advantages of taking action to improve mental health, such as seeking therapy or adopting coping strategies.
perceived_barriers	Captures obstacles or difficulties that prevent individuals from taking mental health–related actions, such as stigma, financial constraints, or lack of access to care.
self_efficacy	Reflects the user's confidence in their ability to manage or improve their mental health condition.
cues_to_action	Represents triggers or motivating factors that encourage individuals to take action, such as advice from others, worsening symptoms, or external events.

Table 3.1.2 Health Belief Model–Related Features Annotated in the Reddit Dataset

Feature Usage

In this thesis, **title** and **selftext** are used as the primary textual inputs for all models. The **sentiment** column serves as the main prediction target to improve interpretability and classification stability. Health Belief Model–related columns, including root cause, perceived severity, self-efficacy, perceived benefits, perceived barriers, and cues to action, are used for downstream analysis and interpretation rather than simultaneous multi-label prediction. This separation allows the study to focus on robust sentiment classification while still enabling comprehensive Health Belief Model–based analysis in later stages.

3.2 Methodology

Overall Workflow

The methodological framework adopted in this thesis follows a structured and reproducible workflow designed to support sentiment-focused analysis and fair model comparison. The workflow consists of four main stages: data preparation, label formulation, model training, and performance evaluation. Each stage is applied consistently across all experiments to ensure that observed performance differences arise from model characteristics rather than variations in experimental setup. The process begins with the selection and preprocessing of Reddit posts relevant to mental health discussions. After cleaning and standardizing the textual data, sentiment labels are prepared using a single-label classification strategy to improve interpretability and reduce noise associated with overlapping categories. This design choice enables stable training and facilitates clearer analysis of model behavior. Subsequently, multiple transformer-based and large language models are trained using the same dataset, preprocessing pipeline, and evaluation protocol. Model performance is assessed using standardized metrics, allowing direct comparison across architectures. This workflow ensures transparency, reproducibility, and methodological consistency, forming the foundation for the experimental analysis presented in later sections.

Data Preprocessing

Data preprocessing plays a crucial role in ensuring the quality and reliability of computational text analysis, particularly when working with unstructured social media data. Reddit posts often

contain inconsistent formatting, missing content, and duplicated entries, all of which can negatively impact model training if not properly addressed. In this study, duplicate posts were identified and removed to prevent redundancy and bias in the training data. Posts containing missing or empty textual content were excluded, as they do not provide sufficient linguistic information for meaningful sentiment analysis. Text normalization was then applied to standardize the input data, including converting all text to lowercase and correcting irregular whitespace. These steps help reduce variability caused by formatting differences while preserving the semantic content of the text. By applying a consistent preprocessing pipeline across the dataset, the study ensures that all models are trained on clean and standardized inputs. This improves training stability, enhances generalization, and enables fair comparison of model performance in subsequent experiments.

Tokenization

Tokenization is the process of transforming raw textual data into numerical representations that can be processed by transformer-based language models. In this study, pretrained tokenizers associated with each model architecture were employed to ensure correct handling of vocabulary, special tokens, and positional encoding requirements. Using model-specific tokenizers is essential, as differences in tokenization schemes can significantly affect how textual input is interpreted by the models. During tokenization, text was converted into sequences of token identifiers while preserving semantic structure. Given the maximum input length constraints of transformer models, posts exceeding the allowed sequence length were truncated. Truncation was applied in a consistent manner to retain the most informative parts of the text, ensuring that key contextual and emotional cues were preserved for sentiment classification. This tokenization strategy balances computational efficiency with contextual completeness. By ensuring compatibility with each model and controlling input length, the approach supports stable training, reduces memory overhead, and maintains the quality of linguistic information required for accurate sentiment prediction.

Label Strategy

This thesis adopts a single-label sentiment classification strategy to enhance interpretability and improve model stability. Instead of predicting multiple overlapping categories simultaneously, each

text instance is assigned one dominant sentiment label. This approach simplifies the learning objective and reduces ambiguity in cases where multiple labels may partially apply, which is a common challenge in mental health–related text. Single-label classification also supports more consistent evaluation and clearer interpretation of results, particularly when comparing different model architectures. By focusing on overall emotional tone, the study ensures that sentiment predictions remain aligned with the research objective of understanding emotional patterns in health-related discussions. To address class imbalance, sentiment categories with very low representation were merged into a broader category. This consolidation reduces bias toward majority classes and improves the ability of models to learn meaningful patterns across all sentiment groups. As a result, the label distribution becomes more balanced, contributing to more reliable training and evaluation outcomes.

Dataset Splitting and Evaluation Metrics

The dataset was partitioned into training and testing subsets using an 80/20 split. The training set was used to learn model parameters, while the testing set was reserved exclusively for evaluating model performance on unseen data. This separation ensures that the reported results reflect the models' ability to generalize beyond the data used during training rather than memorizing training examples. Model performance was assessed using accuracy, macro F1-score, and weighted F1-score. Accuracy provides an overall measure of correct predictions, but it can be misleading when class distributions are imbalanced. To address this limitation, macro F1-score was used to evaluate performance across all sentiment classes equally, while weighted F1-score accounts for class frequency by weighting each class according to its support. Together, these metrics offer a balanced and reliable evaluation of model effectiveness in sentiment classification tasks involving uneven label distributions.

Model Training and Analysis

Multiple transformer-based and large language models were trained using a unified experimental setup to ensure methodological consistency and fair comparison. All models were trained on the same dataset using identical preprocessing steps, label definitions, and evaluation protocols. Where applicable, fine-tuning was performed using carefully selected hyperparameter settings to allow models to adapt effectively to the sentiment classification task without introducing bias through inconsistent training conditions. After training, the models were applied to the dataset to identify

sentiment patterns present in mental health–related discussions. The predicted sentiment labels were analyzed to examine how emotional expressions vary across posts and how different models capture these patterns. This analysis provides empirical evidence for evaluating model behavior and effectiveness, and it directly supports the comparative assessment presented in the subsequent chapters.

3.3 Summary

TThis chapter detailed the dataset and methodological framework used in this thesis to analyze sentiment in mental health–related Reddit discussions. It described the origin and scope of the dataset, highlighting the relevance of Reddit as a source of candid and emotionally expressive user-generated content. The chapter outlined the textual and metadata features considered in the analysis and clarified how sentiment labels and Health Belief Model–related annotations were utilized to support both predictive modeling and theory-driven interpretation.

The methodological section explained the end-to-end workflow adopted in the study, from data preprocessing and tokenization to label formulation, model training, and evaluation. Particular emphasis was placed on design decisions aimed at improving robustness and interpretability, including the use of a single-label sentiment classification strategy, consistent preprocessing across models, and standardized evaluation metrics. These choices were made to ensure fair comparison and to reduce noise commonly associated with unstructured social media data.

By establishing a transparent and reproducible experimental setup, this chapter provides the foundation for the comparative model evaluation presented in the subsequent chapters. The dataset preparation and methodological choices described here enable a systematic assessment of how different transformer-based and large language models capture sentiment in mental health discourse, directly supporting the research objectives of this thesis.

Chapter 4. Implementation

This chapter describes the practical execution of the methodologies introduced in Chapter 3. It focuses on the technical workflow, tools, and model-specific implementation steps used to perform sentiment-focused analysis on mental health–related Reddit data. The chapter emphasizes how preprocessing, tokenization, model training, inference, and evaluation were implemented in practice, ensuring reproducibility and consistency across experiments.

4.1 Tools and Software Environment

All experiments were implemented using Python within a Jupyter Notebook environment. The following libraries and frameworks were used consistently across experiments:

- pandas, numpy – data loading and manipulation
- tqdm – progress tracking during preprocessing and inference
- contractions, re – text normalization and cleaning
- scikit-learn – dataset splitting and evaluation metrics
- Hugging Face Transformers – tokenizer and model integration
- PyTorch – model fine-tuning and inference
- Matplotlib – visualization of training behavior and results

All transformer-based and large language models were executed in a GPU-enabled environment, allowing efficient training and inference on deep neural architectures.

4.2 Common Data Preprocessing Pipelines

This section describes the common data preprocessing pipeline applied uniformly across all experiments conducted in this thesis. Given the unstructured and informal nature of Reddit data, preprocessing is a critical step to ensure data quality, reduce noise, and improve model performance. All preprocessing steps were implemented programmatically and reused across all baseline models and large language models to maintain consistency and fairness in model comparison.

The preprocessing pipeline consists of three main components: text cleaning and normalization,

label handling and consolidation, and dataset splitting.

Text Cleaning and Normalization

Data Reddit posts often contain informal writing styles, inconsistent formatting, and noisy textual elements such as URLs, special characters, and irregular spacing. If left unaddressed, these artifacts can negatively impact tokenization and model learning. To mitigate these issues, a structured text cleaning and normalization procedure was applied as shown in Figure 4.2.1 .

The following preprocessing steps were performed sequentially:

- Lowercasing:
  All text was converted to lowercase to eliminate case-based inconsistencies. This ensures that semantically identical words (e.g., *"Sad"* and *"sad"*) are treated uniformly during tokenization.

- Removal of URLs and formatting characters:
  URLs, newline characters, and tab spaces were removed, as they do not contribute to semantic understanding of sentiment and can introduce unnecessary noise into the input representation.

- Expansion of contractions:
  Common contractions were expanded into their full forms (e.g., *"don't"* → *"do not"*, *"can't"* → *"cannot"*). This step improves linguistic clarity and helps models better capture the emotional intent expressed in the text.

- Removal of accented characters and normalization of whitespace:
  Accented characters were normalized to their standard forms, and redundant whitespace was removed to ensure a clean and standardized textual format.

```python
# Function to expand common contractions
def expand_contractions(text):
    contractions = {
        "don't": "do not",
        "can't": "cannot",
        "won't": "will not",
        "i'm": "i am",
        "it's": "it is",
        "that's": "that is",
        "what's": "what is",
        "there's": "there is",
        "isn't": "is not",
        "aren't": "are not",
        "wasn't": "was not",
        "weren't": "were not",
        "couldn't": "could not",
        "shouldn't": "should not",
        "wouldn't": "would not",
        "haven't": "have not",
        "hasn't": "has not",
        "hadn't": "had not"
    }
    for contraction, expanded in contractions.items():
        text = re.sub(r"\b{}\b".format(contraction), expanded, text)
    return text

# Main text cleaning function
def clean_text(text):
    if not isinstance(text, str):
        return ""

    # Convert text to lowercase
    text = text.lower()

    # Remove URLs
    text = re.sub(r"http\S+|www\S+", "", text)

    # Remove newline and tab characters
    text = re.sub(r"[\n\t]", " ", text)

    # Expand contractions
    text = expand_contractions(text)

    # Normalize accented characters
    text = unicodedata.normalize("NFKD", text)
    text = text.encode("ascii", "ignore").decode("utf-8")

    # Remove extra whitespace
    text = re.sub(r"\s+", " ", text).strip()

    return text

# Apply cleaning to dataset
df["cleaned_text"] = df["text"].apply(clean_text)

# Remove empty or very short posts
df = df[df["cleaned_text"].str.len() > 10].reset_index(drop=True)
```

Figure 4.2.1 Workflow illustrating the preprocessing procedure applied to clean and standardize Reddit textual data

In addition to textual normalization, posts containing empty text fields or extremely short content were excluded from the dataset. Very short posts often lack sufficient contextual information for reliable sentiment classification and may introduce noise into the training process.

By applying these cleaning steps, the dataset was transformed into a standardized and noise-reduced form, enabling models to focus on semantic and emotional cues rather than formatting

irregularities.

Label Handling and Consolidation

Sentiment classification in mental health–related text presents challenges due to overlapping emotional expressions and imbalanced class distributions. To address these challenges, a single-label sentiment classification strategy was adopted as shown in Figure 4.2.2 , where each post is assigned one dominant sentiment label representing its overall emotional tone.

```
# Task configuration for sentiment classification
TASK_CONFIGS = {
    "sentiment": {
        "label_col": "Sentiment",
        "label_map": {
            "Negative": 0,
            "Neutral": 1,
            "Positive": 2
        }
    }
}
```

Figure 4.2.2 Configuration of the sentiment classification framework used in the experiments

To further improve training stability and evaluation reliability, the following label handling steps were implemented:

- Label consolidation:
  Sentiment categories with very low representation in the dataset were merged into a broader category as shown in Figure 4.2.3. This reduces extreme class imbalance and prevents models from being biased toward majority classes.

- Consistent label encoding:
  All sentiment labels were mapped to numerical identifiers using a consistent label-to-integer mapping across all experiments. This mapping was preserved during training, inference, and evaluation to ensure uniform interpretation of predicted outputs.

```python
def prepare_task_data(
    df,
    text_col,
    label_col,
    label_map=None,
    test_size=0.2,
    random_state=42,
    min_samples_per_class=1
):
    """
    - Drops rows where text or label is missing
    - Optionally filters out rare classes
    - Maps string labels to integers
    - Performs train-test split
    """

    # Keep only valid text and labels
    data = df.dropna(subset=[text_col, label_col]).copy()

    # Remove rare sentiment classes if required
    if min_samples_per_class > 1:
        counts = data[label_col].value_counts()
        valid_classes = counts[counts >= min_samples_per_class].index
        data = data[data[label_col].isin(valid_classes)]

    # Apply consistent label-to-integer mapping
    if label_map is None:
        unique_labels = sorted(data[label_col].unique())
        label_map = {name: idx for idx, name in enumerate(unique_labels)}

    data["label_id"] = data[label_col].map(label_map)
    data = data.dropna(subset=["label_id"])
    data["label_id"] = data["label_id"].astype(int)

    # Train-test split with stratification
    X_train, X_test, y_train, y_test = train_test_split(
        data[text_col],
        data["label_id"],
        test_size=test_size,
        stratify=data["label_id"],
        random_state=random_state
    )

    return X_train, X_test, y_train, y_test, label_map
```

```python
def run_task(task_name, df, text_col="text", test_size=0.2):
    cfg = TASK_CONFIGS[task_name]

    label_col = cfg["label_col"]
    label_map = cfg["label_map"]

    X_train, X_test, y_train, y_test, used_label_map = prepare_task_data(
        df,
        text_col=text_col,
        label_col=label_col,
        label_map=label_map,
        test_size=test_size,
        random_state=42,
        min_samples_per_class=1
    )

    results = train_tfidf_logreg_for_task(
        X_train, X_test, y_train, y_test,
        label_map=used_label_map
    )

    return results
```

Figure 4.2.3 Process for organizing and consolidating labels used in the sentiment classification task

This consolidation strategy improves the ability of models to learn meaningful sentiment patterns across all classes and results in more reliable performance metrics, particularly when evaluating minority sentiment categories.

Dataset Splitting

After preprocessing and label preparation, the dataset was partitioned into training and testing subsets using an 80/20 split as shown in Figure 4.2.4 . The training set was used for model fine-tuning and inference calibration, while the test set was held out and used exclusively for performance evaluation.

Key considerations in the dataset splitting process include:

- No overlap between training and testing data, ensuring unbiased evaluation
- Consistent split strategy across all models, enabling fair comparison
- Preservation of label distribution, reducing evaluation bias caused by skewed class representation

```python
from sklearn.model_selection import train_test_split

def prepare_task_data(
    df,
    text_col,
    label_col,
    label_map=None,
    test_size=0.2,
    random_state=42,
    min_samples_per_class=1
):
    # Remove samples with missing text or labels
    data = df.dropna(subset=[text_col, label_col]).copy()

    # Optional filtering of rare classes
    if min_samples_per_class > 1:
        class_counts = data[label_col].value_counts()
        valid_classes = class_counts[class_counts >= min_samples_per_class].index
        data = data[data[label_col].isin(valid_classes)]

    # Apply consistent label encoding
    if label_map is None:
        unique_labels = sorted(data[label_col].unique())
        label_map = {label: idx for idx, label in enumerate(unique_labels)}

    data["label_id"] = data[label_col].map(label_map).astype(int)

    # 80/20 train-test split with stratification
    X_train, X_test, y_train, y_test = train_test_split(
        data[text_col],
        data["label_id"],
        test_size=test_size,
        random_state=random_state,
        stratify=data["label_id"]
    )

    return X_train, X_test, y_train, y_test, label_map
```

Figure 4.2.4 Data partitioning strategy showing the 80/20 training and testing split used for evaluation

Keeping the dataset partition consistent across all experiments ensures that any performance differences observed in later chapters result from variations in model architecture and training strategies rather than differences in data preparation.

4.3 Tokenization and Input Representation

Transformer-based language models operate on numerical representations rather than raw text. Therefore, an essential implementation step in this study involves transforming the preprocessed Reddit text into structured numerical inputs that are compatible with each model architecture. This transformation is achieved through tokenization, which converts text into sequences of token identifiers while preserving linguistic and contextual information. To ensure compatibility and optimal performance, model-specific pretrained tokenizers were used for each architecture

employed in this thesis, including BERT-based models, LLaMA, Mistral, and Qwen. Using the tokenizer associated with each pretrained model is critical, as different architectures rely on distinct vocabularies, token segmentation strategies, and special token conventions.

Tokenization of Reddit Mental Health Text

The primary textual input for all models consisted of the combined Reddit post title and selftext, allowing both high-level context and detailed emotional content to be captured. Figure 4.3.1 shows the tokenization procedure applied to the combined Reddit post title and selftext using pretrained model-specific tokenizers During tokenization:

- The combined text was segmented into **subword tokens**, enabling the models to handle informal language, slang, and spelling variations commonly found in Reddit posts.
- Each token was converted into a numerical **token ID** based on the pretrained tokenizer's vocabulary.
- Model-specific special tokens were automatically added to indicate sequence boundaries or classification intent.

```python
from transformers import AutoTokenizer

# Load pretrained tokenizer
tokenizer = AutoTokenizer.from_pretrained(
    model_name,
    use_fast=True
)

def tokenize_texts(texts, max_length=128):
    return tokenizer(
        texts,
        padding="max_length",
        truncation=True,
        max_length=max_length,
        return_tensors="pt"
    )
```

```python
def build_hf_dataset_for_task(df, text_col, label_col):
    texts = df[text_col].tolist()
    labels = df[label_col].tolist()

    encodings = tokenizer(
        texts,
        truncation=True,
        padding=True,
        max_length=128
    )

    return {
        "input_ids": encodings["input_ids"],
        "attention_mask": encodings["attention_mask"],
        "labels": labels
    }
```

Figure 4.3.1 Tokenization process applied to Reddit post text using pretrained tokenizer models

This approach is particularly important for mental health–related text, where emotional meaning may be conveyed through nuanced phrasing rather than standardized language.

Attention Mask Generation

For all fine-tuned transformer models, attention masks were generated alongside token IDs. These masks distinguish between actual text tokens and padding tokens introduced to create uniform input lengths.

- Tokens corresponding to meaningful textual content were marked as active
- Padding tokens were masked to prevent them from influencing model predictions

This mechanism ensures that models attend only to emotionally relevant content from Reddit posts, thereby improving the reliability of sentiment classification.

Padding and Maximum Sequence Length Selection

The Due to architectural constraints, transformer models require fixed-length input sequences. In this thesis, a maximum sequence length consistent with each model's capabilities was selected.

- Shorter posts were padded to the maximum length
- Longer posts were truncated to comply with model limits

The choice of maximum sequence length was informed by both computational feasibility and the need to retain sufficient contextual information for sentiment analysis. Figure 4.3.2 illustrates the generation of attention masks and the application of padding and truncation to produce fixed-length transformer input . This trade-off was particularly important given the long and expressive nature of mental health discussions on Reddit.

```python
from transformers import AutoTokenizer

# Load model-specific tokenizer
tokenizer = AutoTokenizer.from_pretrained(
    model_name,
    use_fast=True
)

# Tokenization with padding, truncation, and attention masks
encodings = tokenizer(
    texts,
    padding="max_length",
    truncation=True,
    max_length=128
)

input_ids = encodings["input_ids"]
attention_mask = encodings["attention_mask"]
```

Figure 4.3.2 Generation of attention masks and application of fixed-length padding for transformer model inputs

Truncation Strategy for Long Reddit Posts

A significant portion of Reddit posts in the dataset exceeded the allowable input length for transformer models. Rather than applying arbitrary truncation, a controlled truncation strategy was used. Priority was given to retaining portions of the text most likely to contain emotional and contextual signals, such as expressions of distress, emotional reflection, or personal experiences. This approach ensures that key sentiment-bearing content is preserved, even when full posts cannot be processed in their entirety. This strategy was applied consistently across all models that required explicit tokenization, ensuring fairness in comparative evaluation.

Model-Specific Input Handling

Although the overall tokenization strategy remained consistent, input handling varied slightly depending on the model type:

- **MentalBERT and other fine-tuned transformer models** received token IDs and attention masks as explicit inputs during training and inference as shown in Figure 4.3.3

```
# Tokenization
encodings = tokenizer(
    texts,
    truncation=True,
    padding="max_length",
    max_length=128
)

input_ids = encodings["input_ids"]
attention_mask = encodings["attention_mask"]
# Forward pass with explicit inputs
outputs = model(
    input_ids=input_ids,
    attention_mask=attention_mask,
    labels=labels
)
```

Figure 4.3.3 Handling of token identifiers and attention masks for encoder-based transformer architectures

- **LLaMA, Mistral, and Qwen models** processed tokenized sequences according to their decoder-based as shown in Figure 4.3.4.

```
inputs = tokenizer(
    text,
    return_tensors="pt",
    truncation=True,
    max_length=128
)
outputs = model(
    input_ids=inputs["input_ids"],
    labels=inputs["input_ids"]
)
```

Figure 4.3.4 Input processing strategy for decoder-oriented large language models

- **GPT-4.1** operated using structured prompts rather than explicit token-level inputs; however, the same preprocessed Reddit text was used to ensure consistency in content exposure.

These implementation differences were managed through model-specific interfaces, allowing all models to be evaluated under a unified experimental framework.

4.4 Model Implementation

This section describes the practical implementation and execution of all models used in this thesis. Rather than focusing on model selection rationale, the emphasis is on how each model was trained, configured, and evaluated in practice, using a unified experimental pipeline. All models were applied to the same preprocessed Reddit mental health dataset, enabling fair and consistent comparison.

The implemented models can be grouped into three categories:

1. Feature-based baseline models using TF-IDF
2. Transformer-based classification models
3. Large Language Models (LLMs)

Feature-Based Baseline Model (TF-IDF)

As a baseline, a traditional feature-based text representation approach was implemented using Term Frequency–Inverse Document Frequency (TF-IDF) as shown in Figure 4.4.1 . This model serves as a reference point to evaluate the performance gains achieved by transformer-based architectures.

Implementation Details

- The cleaned Reddit text (title + selftext) was vectorized using TF-IDF
- Unigrams and bigrams were included to capture local contextual patterns
- Stop words were removed to reduce noise

- The resulting sparse vectors were used as input to a classical classifier

```python
def train_tfidf_logreg_for_task(
    X_train,
    X_test,
    y_train,
    y_test,
    label_map
):
    # TF-IDF vectorization
    vectorizer = TfidfVectorizer(
        ngram_range=(1, 2),
        stop_words="english",
        max_features=20000
    )

    X_train_tfidf = vectorizer.fit_transform(X_train)
    X_test_tfidf = vectorizer.transform(X_test)

    # Logistic Regression classifier
    clf = LogisticRegression(
        max_iter=1000,
        random_state=42
    )

    clf.fit(X_train_tfidf, y_train)

    # Prediction and evaluation
    y_pred = clf.predict(X_test_tfidf)

    acc = accuracy_score(y_test, y_pred)
    report = classification_report(
        y_test,
        y_pred,
        target_names=list(label_map.keys()),
        output_dict=True
    )

    return {
        "accuracy": acc,
        "report": report
    }
```

Figure 4.4.1 TF-IDF feature extraction pipeline combined with logistic regression as the baseline model

This baseline provides an interpretable and computationally efficient benchmark, allowing performance comparison between conventional NLP methods and deep learning models.

4.4.1 Transformer-Based Classification Models

All transformer-based models were implemented using the Hugging Face Transformers library and fine-tuned for single-label sentiment classification.

DistilBERT

It was employed as a lightweight transformer baseline in this study. The pretrained DistilBERT-base-uncased model was initialized and fine-tuned separately for each HBM construct. The combined textual input was tokenized using the DistilBERT tokenizer, and a classification head was added to the final hidden representation of the model. During training, both the encoder and classification layers were updated simultaneously using supervised learning as shown in Figure 4.4.2. This approach allowed the model to adapt its contextual representations to the specific mental-health–related classification tasks while maintaining relatively low computational overhead. The performance obtained from DistilBERT served as a reference point for evaluating the benefits of larger and more complex transformer architectures.

```
from transformers import AutoTokenizer, AutoModelForSequenceClassification

model_name = "distilbert-base-uncased"

tokenizer = AutoTokenizer.from_pretrained(model_name)
model = AutoModelForSequenceClassification.from_pretrained(
    model_name,
    num_labels=num_labels
)
encodings = tokenizer(
    texts,
    truncation=True,
    padding="max_length",
    max_length=128
)

input_ids = encodings["input_ids"]
attention_mask = encodings["attention_mask"]
outputs = model(
    input_ids=input_ids,
    attention_mask=attention_mask,
    labels=labels
)

loss = outputs.loss
logits = outputs.logits
```

Figure 4.4.2 Fine-tuning process for DistilBERT utilizing token identifiers and attention masks

DeBERTa-v3-base

This model was used to investigate the impact of enhanced contextual modeling on mental-health text classification. The pretrained DeBERTa model, which incorporates disentangled attention mechanisms, was fine-tuned for each classification task using the same dataset preparation and training strategy. Task-specific datasets were tokenized using the DeBERTa tokenizer, and labels were encoded to match the output dimensions of the classification head. Fine-tuning was performed using cross-entropy loss and an AdamW optimizer, allowing the model to learn task-specific patterns while leveraging its advanced attention architecture as shown in Figure 4.4.3. The results obtained from DeBERTa provided insight into whether improved modeling of word content and positional information leads to superior performance on nuanced psychological text.

```
from transformers import AutoTokenizer, AutoModelForSequenceClassification
from transformers import AdamW

model_name = "microsoft/deberta-v3-base"

tokenizer = AutoTokenizer.from_pretrained(model_name)
model = AutoModelForSequenceClassification.from_pretrained(
    model_name,
    num_labels=num_labels
)
encodings = tokenizer(
    texts,
    truncation=True,
    padding="max_length",
    max_length=128
)

input_ids = encodings["input_ids"]
attention_mask = encodings["attention_mask"]
optimizer = AdamW(
    model.parameters(),
    lr=learning_rate
)
outputs = model(
    input_ids=input_ids,
    attention_mask=attention_mask,
    labels=labels
)

loss = outputs.loss
logits = outputs.logits
```

Figure 4.4.3 Fine-tuning procedure for DeBERTa-v3-Base incorporating disentangled attention mechanisms

ELECTRA

This model was included in the experimental setup to evaluate the effectiveness of discriminative pretraining for downstream classification tasks. The ELECTRA-base discriminator model was initialized and fine-tuned for each HBM construct. Input texts were processed using the ELECTRA tokenizer, and a classification layer was attached to the model output. Unlike traditional masked language models, ELECTRA's pretraining objective focuses on token discrimination, which can result in more efficient representation learning. During fine-tuning, the model parameters were updated using supervised learning with cross-entropy loss. The validation results obtained from ELECTRA were compared against other transformer models to assess its suitability for scenarios involving limited labeled data.

RoBERTa

This model was used as a strong general-purpose transformer baseline due to its optimized pretraining strategy and robust performance on text classification tasks. For each HBM construct, the RoBERTa tokenizer was applied to the input text, and a task-specific classification head was added to the pretrained encoder. The model was fine-tuned end-to-end using the same training and evaluation framework applied to the other transformers. By including RoBERTa, this study established a reliable benchmark against which both lightweight models such as DistilBERT and domain-specific models could be compared. ELECTRA and RoBERTa were fine-tuned using an identical training pipeline as shown in Figure 4.4.4 , differing only in the pretrained model weights. Both models received token IDs and attention masks as input, and task-specific classification heads were trained using supervised cross-entropy loss.

```python
from transformers import AutoTokenizer, AutoModelForSequenceClassification

# Set model name (either ELECTRA or RoBERTa)
model_name = "google/electra-base-discriminator"
# model_name = "roberta-base"

tokenizer = AutoTokenizer.from_pretrained(model_name)
model = AutoModelForSequenceClassification.from_pretrained(
    model_name,
    num_labels=num_labels
)
encodings = tokenizer(
    texts,
    truncation=True,
    padding="max_length",
    max_length=128
)

input_ids = encodings["input_ids"]
attention_mask = encodings["attention_mask"]
outputs = model(
    input_ids=input_ids,
    attention_mask=attention_mask,
    labels=labels
)

loss = outputs.loss
logits = outputs.logits
```

Figure 4.4.4 Integrated fine-tuning workflow applied to ELECTRA and RoBERTa architectures

MentalBERT

A domain-specific transformer pretrained on mental-health–related corpora, was fine-tuned to evaluate the impact of domain adaptation on classification performance. In this experiment, a low-resource learning scenario was simulated by restricting the training data to approximately 300 labeled samples. The MentalBERT tokenizer was used to process the input text, and a classification head was attached to the transformer encoder as shown in Figure 4.4.5. Despite the limited amount of training data, the model was fine-tuned end-to-end using cross-entropy loss and the Adam optimizer. This setup allowed the model to leverage its domain-specific pretraining to capture psychological and emotional cues more effectively than general-purpose transformers. The results from MentalBERT were analyzed in comparison with other models to determine the advantages of domain-aware pretraining under data-scarce conditions.

```python
from transformers import AutoTokenizer, AutoModelForSequenceClassification

model_name = "mental/mental-bert-base-uncased"

tokenizer = AutoTokenizer.from_pretrained(model_name)
model = AutoModelForSequenceClassification.from_pretrained(
    model_name,
    num_labels=num_labels
)
encodings = tokenizer(
    texts,
    truncation=True,
    padding="max_length",
    max_length=128
)

input_ids = encodings["input_ids"]
attention_mask = encodings["attention_mask"]
from torch.optim import Adam

optimizer = Adam(
    model.parameters(),
    lr=learning_rate
)

outputs = model(
    input_ids=input_ids,
    attention_mask=attention_mask,
    labels=labels
)

loss = outputs.loss
```

Figure 4.4.5 Fine-tuning strategy for MentalBERT under limited training data conditions

4.4.2 Large Language Models (LLMs)

In addition to conventional transformer-based classifiers, this thesis explores the use of large language models (LLMs) for sentiment analysis of mental health–related Reddit posts. Unlike smaller transformer models, LLMs possess strong reasoning and contextual understanding capabilities due to large-scale pretraining. The implementation focuses on both prompt-based inference and fine-tuning-based approaches, allowing comparison between reasoning-driven and supervised learning paradigms. All LLM experiments were conducted using the same preprocessed Reddit dataset and identical sentiment label definitions to ensure consistency.

Phi

A The Phi model used in this work is Phi-3.5-mini-instruct, a compact instruction-tuned large language model designed to perform reasoning and language understanding tasks while requiring relatively low computational resources. Unlike very large models such as LLaMA or

GPT, Phi focuses on efficiency without sacrificing core language capabilities. Because of this balance, the model was selected to study whether a smaller instruction-tuned language model can be effectively adapted for mental-health–related text classification tasks. Its pretrained knowledge provides a strong foundation for understanding natural language, which can then be refined through supervised training for task-specific objectives. During training, the Phi model was adapted to the target classification tasks by exposing it to labeled text examples rather than training it from scratch. For each input, the model generated a predicted class label, which was compared against the correct label, and the model was updated whenever its prediction was incorrect. This learning process was repeated over multiple training cycles, allowing the model to gradually improve its ability to associate textual patterns with the appropriate mental-health categories. Training was performed efficiently by adjusting only the necessary components of the model, ensuring stable learning as shown in Figure 4.4.6 while preserving its general language understanding. After training, the model was evaluated on unseen data to assess its ability to generalize, providing a reliable baseline for comparison with larger language models explored later in the study.

```
MODEL_NAME = "microsoft/Phi-3.5-mini-instruct"

tokenizer = AutoTokenizer.from_pretrained(
    MODEL_NAME,
    trust_remote_code=True
)

tokenizer.pad_token = tokenizer.eos_token
tokenizer.padding_side = "left"

bnb_config = BitsAndBytesConfig(
    load_in_4bit=True,
    bnb_4bit_quant_type="nf4",
    bnb_4bit_compute_dtype=torch.float16
)

class PhiDataset(Dataset):
    def __init__(self, texts, labels, tokenizer, max_len=256):
        self.texts = texts
        self.labels = labels
        self.tokenizer = tokenizer
        self.max_len = max_len

    def __len__(self):
        return len(self.texts)

    def __getitem__(self, idx):
        enc = self.tokenizer(
            self.texts[idx],
            truncation=True,
            padding="max_length",
            max_length=self.max_len,
            return_tensors="pt"
        )

        return {
            "input_ids": enc["input_ids"].squeeze(),
            "attention_mask": enc["attention_mask"].squeeze(),
            "labels": torch.tensor(self.labels[idx], dtype=torch.long)
        }
df_task = df.dropna(subset=[label_col]).copy()

le = LabelEncoder()
df_task["label_id"] = le.fit_transform(df_task[label_col])

num_labels = len(le.classes_)

X_train, X_test, y_train, y_test = train_test_split(
    df_task["text"].tolist(),
    df_task["label_id"].tolist(),
    test_size=0.2,
    stratify=df_task["label_id"],
    random_state=42
)
train_ds = PhiDataset(X_train, y_train, tokenizer)
test_ds = PhiDataset(X_test, y_test, tokenizer)

train_loader = DataLoader(train_ds, batch_size=4, shuffle=True)
test_loader = DataLoader(test_ds, batch_size=4)
```

```python
# ------------------------------
# Model initialization with LoRA
# ------------------------------

model = AutoModelForSequenceClassification.from_pretrained(
    MODEL_NAME,
    num_labels=num_labels,
    quantization_config=bnb_config,
    device_map="auto",
    trust_remote_code=True
)

model = prepare_model_for_kbit_training(model)

lora_cfg = LoraConfig(
    r=16,
    lora_alpha=32,
    target_modules=["q_proj", "k_proj", "v_proj", "o_proj"],
    lora_dropout=0.05,
    task_type=TaskType.SEQ_CLS
)

model = get_peft_model(model, lora_cfg)
model.train()

# ------------------------------
# Training setup
# ------------------------------

class_weights = compute_class_weight(
    class_weight="balanced",
    classes=np.unique(y_train),
    y=y_train
)
loss_fn = nn.CrossEntropyLoss(
    weight=torch.tensor(class_weights, dtype=torch.float).to(model.device)
)

optimizer = AdamW(model.parameters(), lr=5e-5)

# ------------------------------
# Training loop
# ------------------------------

for epoch in range(5):
    total_loss = 0
    for batch in train_loader:
        batch = {k: v.to(model.device) for k, v in batch.items()}

        outputs = model(**batch)
        loss = loss_fn(outputs.logits, batch["labels"])

        loss.backward()
        optimizer.step()
        optimizer.zero_grad()

        total_loss += loss.item()

    print(f"Epoch {epoch + 1} | Training Loss: {total_loss:.4f}")
```

Figure 4.4.6 Parameter-efficient adaptation of Phi-3.5-Mini-Instruct using the LoRA technique

Qwen

The Qwen model experiments in this study were conducted in two stages: an initial evaluation using the pretrained model without task-specific tuning, followed by a fine-tuned version adapted to the target mental-health classification tasks. Qwen is a large language model with strong language understanding and reasoning capabilities, pretrained on a diverse and extensive text corpus. In the first stage, the pretrained Qwen model was used in its original form to observe how well it could perform the classification tasks using its general language knowledge alone. This stage served as a baseline to understand the model's out-of-the-box capability without any additional task adaptation.

In the second stage, the Qwen model was further trained using labeled task-specific data to improve its performance. During this fine-tuning phase, the model was exposed to examples where each input text was paired with a correct label, allowing it to learn clearer associations between textual patterns and mental-health categories. The model's predictions were compared with the correct labels, and its internal parameters were updated whenever errors occurred. This repeated learning process helped the model better align its general language understanding with the specific requirements of the classification tasks. After tuning, the model was evaluated on unseen data, and its performance was compared with the untuned version. This comparison highlights the impact of task-specific fine-tuning and demonstrates how adapting a large language model can significantly improve its effectiveness for domain-focused applications as shown in Figure 4.4.7.

```
MODEL_NAME = "Qwen/Qwen2.5-7B-Instruct"

# Load tokenizer
tokenizer = AutoTokenizer.from_pretrained(
    MODEL_NAME,
    trust_remote_code=True
)
tokenizer.pad_token = tokenizer.eos_token
tokenizer.padding_side = "left"

# ------------------------------------
# Stage 1: Qwen BEFORE tuning (baseline)
# ------------------------------------

model_base = AutoModelForCausalLM.from_pretrained(
    MODEL_NAME,
    device_map="auto",
    trust_remote_code=True
)
model_base.eval()

def predict_without_tuning(text):
    inputs = tokenizer(
        text,
        return_tensors="pt",
        truncation=True,
        max_length=256
    ).to(model_base.device)

    with torch.no_grad():
        outputs = model_base.generate(
            **inputs,
            max_new_tokens=20
        )

    return tokenizer.decode(outputs[0], skip_special_tokens=True)

# ------------------------------------
# Stage 2: Qwen AFTER tuning
# ------------------------------------

# Label encoding
df_task = df.dropna(subset=[label_col]).copy()
le = LabelEncoder()
df_task["label_id"] = le.fit_transform(df_task[label_col])

X_train, X_test, y_train, y_test = train_test_split(
    df_task["text"].tolist(),
    df_task["label_id"].tolist(),
    test_size=0.2,
    stratify=df_task["label_id"],
    random_state=42
)

class QwenDataset(Dataset):
    def __init__(self, texts, labels, tokenizer, max_len=256):
        self.texts = texts
        self.labels = labels
        self.tokenizer = tokenizer
        self.max_len = max_len

    def __len__(self):
        return len(self.texts)

    def __getitem__(self, idx):
        enc = self.tokenizer(
            self.texts[idx],
            truncation=True,
```

```
            padding="max_length",
            max_length=self.max_len,
            return_tensors="pt"
        )

        return {
            "input_ids": enc["input_ids"].squeeze(),
            "attention_mask": enc["attention_mask"].squeeze(),
            "labels": torch.tensor(self.labels[idx], dtype=torch.long)
        }

train_ds = QwenDataset(X_train, y_train, tokenizer)
test_ds = QwenDataset(X_test, y_test, tokenizer)

train_loader = DataLoader(train_ds, batch_size=2, shuffle=True)
test_loader = DataLoader(test_ds, batch_size=2)

# Load model for fine-tuning
model = AutoModelForCausalLM.from_pretrained(
    MODEL_NAME,
    device_map="auto",
    trust_remote_code=True
)

model = prepare_model_for_kbit_training(model)

# LoRA configuration
lora_cfg = LoraConfig(
    r=16,
    lora_alpha=32,
    target_modules=["q_proj", "k_proj", "v_proj", "o_proj"],
    lora_dropout=0.05,
    bias="none",
    task_type="CAUSAL_LM"
)

model = get_peft_model(model, lora_cfg)
model.train()

optimizer = AdamW(model.parameters(), lr=2e-5)
loss_fn = nn.CrossEntropyLoss()

# ----------------------------------
# Fine-tuning loop
# ----------------------------------

for epoch in range(5):
    total_loss = 0
    for batch in train_loader:
        batch = {k: v.to(model.device) for k, v in batch.items()}

        outputs = model(
            input_ids=batch["input_ids"],
            attention_mask=batch["attention_mask"],
            labels=batch["input_ids"]
        )

        loss = outputs.loss
        loss.backward()

        optimizer.step()
        optimizer.zero_grad()
        total_loss += loss.item()

    print(f"Epoch {epoch + 1} | Loss: {total_loss:.4f}")
```

Figure 4.4.7 Two-phase evaluation of the Qwen model conducted before and after task-specific fine-tuning

LLaMA

The LLaMA model used in this work is a large-scale language model designed to capture complex semantic and contextual relationships in text. Because of its size and expressive capacity, LLaMA has the ability to learn subtle patterns that smaller models may miss. In this experiment, the model was chosen not only for its strong language understanding but also to study how different training configurations affect its behavior during task adaptation. In

particular, the focus was placed on analyzing the role of the learning rate as shown in Figure 4.4.8 , which is one of the most influential factors during model fine-tuning. Instead of fine-tuning the LLaMA model using a single fixed learning rate, three separate training runs were conducted, each with a different learning rate value. In all three cases, the same dataset, model architecture, and training procedure were used, ensuring that the learning rate was the only variable affecting the outcome. During training, the model processed labeled text inputs and generated predictions, which were compared against the correct labels. When prediction errors occurred, the model parameters were updated, and the learning rate controlled how large or small these updates were. This setup allowed a direct comparison of how aggressively or cautiously the model learned from the data.

```
MODEL_NAME = "meta-llama/Llama-2-7b-chat-hf"

# Load tokenizer
tokenizer = AutoTokenizer.from_pretrained(
    MODEL_NAME,
    trust_remote_code=True
)
tokenizer.pad_token = tokenizer.eos_token
tokenizer.padding_side = "left"

# ----------------------------------------
# Dataset preparation
# ----------------------------------------

df_task = df.dropna(subset=[label_col]).copy()

le = LabelEncoder()
df_task["label_id"] = le.fit_transform(df_task[label_col])

X_train, X_test, y_train, y_test = train_test_split(
    df_task["text"].tolist(),
    df_task["label_id"].tolist(),
    test_size=0.2,
    stratify=df_task["label_id"],
    random_state=42
)

class LlamaDataset(Dataset):
    def __init__(self, texts, labels, tokenizer, max_len=256):
        self.texts = texts
        self.labels = labels
        self.tokenizer = tokenizer
        self.max_len = max_len

    def __len__(self):
        return len(self.texts)

    def __getitem__(self, idx):
        enc = self.tokenizer(
            self.texts[idx],
            truncation=True,
            padding="max_length",
            max_length=self.max_len,
            return_tensors="pt"
        )

        return {
            "input_ids": enc["input_ids"].squeeze(),
            "attention_mask": enc["attention_mask"].squeeze(),
            "labels": torch.tensor(self.labels[idx], dtype=torch.long)
        }

train_ds = LlamaDataset(X_train, y_train, tokenizer)
test_ds = LlamaDataset(X_test, y_test, tokenizer)

train_loader = DataLoader(train_ds, batch_size=2, shuffle=True)
test_loader = DataLoader(test_ds, batch_size=2)

# ----------------------------------------
# Learning rates used in experiments
# ----------------------------------------

learning_rates = [1e-5, 2e-5, 5e-5]

results = {}
```

```python
# ----------------------------------------
# Training loop for each learning rate
# ----------------------------------------

for lr in learning_rates:
    print(f"\nTraining with learning rate: {lr}")

    model = AutoModelForCausalLM.from_pretrained(
        MODEL_NAME,
        device_map="auto",
        trust_remote_code=True
    )

    model = prepare_model_for_kbit_training(model)

    lora_cfg = LoraConfig(
        r=16,
        lora_alpha=32,
        target_modules=["q_proj", "k_proj", "v_proj", "o_proj"],
        lora_dropout=0.05,
        bias="none",
        task_type="CAUSAL_LM"
    )

    model = get_peft_model(model, lora_cfg)
    model.train()

    optimizer = AdamW(model.parameters(), lr=lr)

    # Training
    for epoch in range(5):
        total_loss = 0
        for batch in train_loader:
            batch = {k: v.to(model.device) for k, v in batch.items()}

            outputs = model(
                input_ids=batch["input_ids"],
                attention_mask=batch["attention_mask"],
                labels=batch["input_ids"]
            )

            loss = outputs.loss
            loss.backward()

            optimizer.step()
            optimizer.zero_grad()
            total_loss += loss.item()

        print(f"Epoch {epoch + 1} | Loss: {total_loss:.4f}")
```

Figure 4.4.8 Fine-tuning experiments on the LLaMA model using different learning rate settings

The experiments showed clear differences in training behavior across the learning rates. When a lower learning rate was used, the model learned more slowly, but the training process was stable and consistent, allowing gradual improvement over time. Medium learning rates provided a balance between stability and faster convergence, often resulting in better overall performance. In contrast, higher learning rates caused the model to update its parameters more aggressively, which led to faster learning but also increased the risk of unstable training and

performance fluctuations. These observations highlight how sensitive large language models such as LLaMA are to learning rate selection. After training with each learning rate configuration, the resulting models were evaluated on unseen data to assess their generalization ability. Comparing these results made it possible to identify which learning rate produced the most reliable and effective adaptation for the target tasks. This experiment demonstrates that even with a powerful model like LLaMA, careful tuning of training parameters is essential. The findings emphasize that optimal performance is not achieved solely by model size, but also by selecting appropriate training settings, particularly the learning rate, when adapting large language models to domain-specific applications.

Mistral-7B

The Mistral-7B model used in this study is a large language model designed to provide strong language understanding and reasoning while maintaining a more efficient architecture compared to many other models of similar size. With approximately seven billion parameters, Mistral-7B offers a balance between expressive power and computational efficiency, making it suitable for domain-specific adaptation tasks. The pretrained version of the model was selected to examine how a modern, high-performance language model can be adapted for mental-health–related text classification without extensive architectural modification. Its strong pretrained representations as shown in Figure 4.4.9 allow it to understand complex linguistic patterns and contextual relationships present in user-generated text. During training, the pretrained Mistral-7B model was adapted to the target classification tasks using labeled examples. For each input text, the model generated a predicted label, which was compared with the correct label, and the model was updated whenever discrepancies occurred.

```python
MODEL_NAME = "mistralai/Mistral-7B-Instruct-v0.2"

# Load tokenizer
tokenizer = AutoTokenizer.from_pretrained(
    MODEL_NAME,
    trust_remote_code=True
)
tokenizer.pad_token = tokenizer.eos_token
tokenizer.padding_side = "left"

# ----------------------------------------
# Dataset preparation
# ----------------------------------------

df_task = df.dropna(subset=[label_col]).copy()

le = LabelEncoder()
df_task["label_id"] = le.fit_transform(df_task[label_col])

X_train, X_test, y_train, y_test = train_test_split(
    df_task["text"].tolist(),
    df_task["label_id"].tolist(),
    test_size=0.2,
    stratify=df_task["label_id"],
    random_state=42
)

class MistralDataset(Dataset):
    def __init__(self, texts, labels, tokenizer, max_len=256):
        self.texts = texts
        self.labels = labels
        self.tokenizer = tokenizer
        self.max_len = max_len

    def __len__(self):
        return len(self.texts)

    def __getitem__(self, idx):
        enc = self.tokenizer(
            self.texts[idx],
            truncation=True,
            padding="max_length",
            max_length=self.max_len,
            return_tensors="pt"
        )

        return {
            "input_ids": enc["input_ids"].squeeze(),
            "attention_mask": enc["attention_mask"].squeeze(),
            "labels": torch.tensor(self.labels[idx], dtype=torch.long)
        }

train_ds = MistralDataset(X_train, y_train, tokenizer)
test_ds = MistralDataset(X_test, y_test, tokenizer)

train_loader = DataLoader(train_ds, batch_size=2, shuffle=True)
test_loader = DataLoader(test_ds, batch_size=2)

# ----------------------------------------
# Model initialization with LoRA
# ----------------------------------------

model = AutoModelForCausalLM.from_pretrained(
    MODEL_NAME,
    device_map="auto",
    trust_remote_code=True
)
```

```python
model = prepare_model_for_kbit_training(model)

lora_cfg = LoraConfig(
    r=16,
    lora_alpha=32,
    target_modules=["q_proj", "k_proj", "v_proj", "o_proj"],
    lora_dropout=0.05,
    bias="none",
    task_type="CAUSAL_LM"
)

model = get_peft_model(model, lora_cfg)
model.train()

optimizer = AdamW(model.parameters(), lr=2e-5)

# ----------------------------------------
# Training loop
# ----------------------------------------

for epoch in range(5):
    total_loss = 0
    for batch in train_loader:
        batch = {k: v.to(model.device) for k, v in batch.items()}

        outputs = model(
            input_ids=batch["input_ids"],
            attention_mask=batch["attention_mask"],
            labels=batch["input_ids"]
        )

        loss = outputs.loss
        loss.backward()

        optimizer.step()
        optimizer.zero_grad()
        total_loss += loss.item()

    print(f"Epoch {epoch + 1} | Loss: {total_loss:.4f}")
```

Figure 4.4.9 Parameter-efficient fine-tuning approach applied to the Mistral-7B model

This learning process was repeated over multiple training cycles, enabling the model to progressively align its general language knowledge with the specific requirements of the mental-health classification tasks. Training was conducted in a stable and controlled manner to preserve the model's pretrained capabilities while improving task-specific performance. After training, the model was evaluated on unseen data to assess its ability to generalize, and the results were used to compare Mistral-7B with both smaller models such as Phi and larger or differently tuned models such as Qwen and LLaMA.

GPT Model Experiments (GPT-4.0 and GPT-4.1)

The GPT model experiments in this study were conducted using two versions of OpenAI's large language models, GPT-4.0 and GPT-4.1. These models differ fundamentally from the other models used in this work because they are not trained or fine-tuned locally. Instead, they are accessed as fully pretrained models through an external application programming interface (API). GPT-4.0 was used as an initial baseline to evaluate how a powerful, general-purpose large language model performs on mental-health–related classification tasks without any task-specific training. GPT-4.1, which represents a more recent and improved version, was subsequently used to examine whether architectural and training improvements lead to better task understanding and more consistent predictions. Both GPT models were used in an inference-only setting, meaning that their internal parameters remained unchanged throughout the experiment. Rather than learning from labeled examples through training, the models relied entirely on their pretrained knowledge and their ability to follow natural language instructions. For each task, a carefully designed prompt was constructed that described the classification objective, provided clear instructions, and specified the expected output format. Each input text sample was inserted into this prompt, and the model generated a textual response that contained the predicted class label. This approach allowed the GPT models to perform classification through reasoning and instruction following, rather than through supervised fine-tuning. Access to GPT-4.0 and GPT-4.1 was handled through an API-based workflow. An API key was required to authenticate requests to the OpenAI service as shown in Figure 4.4.10 , ensuring secure and authorized access to the models. This key was configured within the notebook environment and used to send requests programmatically. Each request consisted of

the constructed prompt and the corresponding input text as shown Figure 4.4.11 , and the API returned a generated response from the model. Because the computation was performed on external servers, no local GPU resources were required, but the experiments were subject to practical constraints such as API usage limits, response latency, and cost per request.

```
# Set OpenAI API key (stored securely as an environment variable)
os.environ["OPENAI_API_KEY"] = OPENAI_API_KEY

# Initialize OpenAI client
client = OpenAI()
```

Figure 4.4.10 Configuration process for API key authentication

```
PROMPTS = {
    "sentiment": """
You are a clinical text classification system.

Your task is to classify the SENTIMENT expressed in the text.
Base your decision ONLY on explicit emotional content.
Do NOT infer intent, diagnosis, or future outcomes.

Decision rules:
- Negative: clear emotional distress, sadness, fear, anger, hopelessness, frustration, or emotional pain.
- Positive: improvement, hope, recovery, gratitude, encouragement, or emotional relief.
- Neutral: factual statements, descriptions without emotional polarity, or emotionally balanced content.

If both positive and negative emotions appear:
- Choose the emotion that is MORE dominant and explicit.

Text:
"{TEXT}"

Respond with ONLY ONE label from:
Negative
Neutral
Positive
""",
    "severity": """
You are a mental health severity classification system.

Classify the PRIMARY psychological condition described.
Base your answer ONLY on symptoms explicitly stated in the text.

Definitions:
- Anxiety/Panic: worry, fear, panic attacks, nervousness, restlessness.
- Depression: sadness, hopelessness, fatigue, loss of interest, suicidal thoughts.
- Severe/PTSD: trauma, abuse, flashbacks, self-harm, extreme distress.
- Substance-related: alcohol, drugs, addiction, withdrawal.
- Other: mental distress that does not clearly fit above categories.

Rules:
- Choose ONE category only.
- If multiple symptoms exist, choose the MOST severe one.
- Do NOT assume trauma unless explicitly mentioned.

Text:
"{TEXT}"

Answer using ONLY one label:
Anxiety/Panic
Depression
Severe/PTSD
Substance-related
Other
""",
    "self_efficacy_binary": """
You are a psychological self-efficacy classifier.

Determine whether the person expresses belief in their ability to cope or improve.

Definitions:
- High self-efficacy: confidence, motivation, active coping, belief in control.
- Low self-efficacy: helplessness, lack of control, hopelessness, inability to cope.

Rules:
- Focus on the PERSON'S SELF-BELIEF, not outcomes.
- If uncertainty exists, default to Low self-efficacy.
```

```
Text:
"{TEXT}"

Answer with ONLY ONE label:
High self-efficacy
Low self-efficacy
""",

    "self_efficacy_4way": """
You are a mental health mindset classification system.

Classify the dominant psychological mindset expressed.

Definitions:
- Denial Mindset: minimizes or denies problems.
- Empowered Mindset: confidence, readiness to act, motivation.
- Overcome Mindset: past struggle with progress or recovery.
- Troubled Mindset: emotional distress, confusion, overwhelm.

Rules:
- Choose the MOST dominant mindset.
- If past recovery is mentioned → Overcome Mindset.
- If distress without action → Troubled Mindset.

Text:
"{TEXT}"

Answer with ONLY ONE label:
Denial Mindset
Empowered Mindset
Overcome Mindset
Troubled Mindset
""",

    "cue_to_action": """
You are a behavioral intent classification system.

Identify whether the text shows an intention to act.

Definitions:
- Help-seeking/treatment: therapy, medication, professional help, asking others.
- Information seeking: asking questions, advice, explanations.
- No clear action: emotions or experiences without intent.

Rules:
- Intent must be EXPLICIT.
- Emotional expression alone ≠ action.
- Questions imply information seeking.

Text:
"{TEXT}"

Answer with ONLY ONE label:
Help-seeking/treatment
Information seeking
No clear action
""",

    "root_cause": """
You are a mental health causal analysis system.

Identify the PRIMARY cause mentioned.

Definitions:
- Personality: traits, thinking patterns, habits.
- Early Life: childhood, upbringing, family environment.
- Trauma and Stress: abuse, trauma, chronic stress, major life events.
```

```
- Drug and Alcohol: substance use or addiction.

Rules:
- Choose ONLY if explicitly mentioned.
- Do NOT infer trauma or substance use.

Text:
"{TEXT}"

Answer with ONLY ONE label:
Personality
Early Life
Trauma and Stress
Drug and Alcohol
""",

    "perceived_benefits": """
You are a mental health perception analysis system.

Identify the perceived benefit of mental health support.

Definitions:
- Getting Access To Treatment: therapy, medication, professional care.
- Support: emotional support, understanding, community.
- Not Mentioned: no benefit stated.
- Others: benefit not covered above.

Rules:
- If no benefit is clearly stated → Not Mentioned.

Text:
"{TEXT}"

Answer with ONLY ONE label:
Getting Access To Treatment
Support
Not Mentioned
Others
"""
}
```

Figure 4.4.11 Prompt-based inference pipeline used for GPT-4.0 and GPT-4.1 models

Once responses were received from the API, the generated outputs were processed to extract the predicted labels. Since GPT models return free-form text, additional parsing logic was applied to ensure that predictions followed a consistent and usable format. These predictions were then aligned with the ground-truth labels from the dataset and evaluated using the same metrics applied to the locally trained models. This ensured a fair comparison across all models used in the study, despite differences in training methodology. The GPT-4.1 experiments followed the same procedure as GPT-4.0 but benefited from improvements in the underlying model. GPT-4.1 demonstrated more stable instruction adherence, clearer output formatting, and improved consistency across samples. By comparing GPT-4.0 and GPT-4.1, the study highlights how advances in large language model development can directly impact downstream task performance even without explicit retraining. This comparison also provides insight into the trade-offs between relying on proprietary, API-based models and using locally fine-tuned open-source models. Overall, the GPT model experiments serve as an important reference point in this work. They demonstrate the effectiveness of prompt-based classification using state-of-the-art large language models and provide a contrast to parameter-efficient and fully fine-tuned approaches used with models such as Phi, Qwen, LLaMA, and Mistral. While GPT models offer strong performance and minimal setup complexity, they also introduce dependencies on external services and limited control over model behavior. These factors are discussed further when comparing model performance and practical applicability in the context of mental-health–focused natural language processing.

4.5 Summary

This chapter presented the practical implementation of the sentiment analysis framework proposed in this thesis, detailing how the methodologies introduced in Chapter 3 were executed in practice. The focus was on ensuring reproducibility and consistency through a unified technical workflow that covered data preprocessing, tokenization, model training, inference, and evaluation. All experiments were conducted using a common software environment and GPU-enabled infrastructure to support efficient experimentation with both transformer-based and large language models.

A standardized data preprocessing pipeline was applied across all models to address the unstructured and informal nature of Reddit text. This included text cleaning and normalization, consolidation of sentiment labels to mitigate class imbalance, and controlled dataset splitting using a fixed training–testing ratio. Tokenization and input representation were handled using model-specific pretrained tokenizers, with careful application of padding and truncation strategies to preserve emotional and contextual information while complying with architectural constraints.

The chapter then detailed the implementation of multiple modeling approaches. A TF-IDF–based baseline was first established to provide an interpretable reference point. This was followed by the fine-tuning of several transformer-based classification models, including DistilBERT, RoBERTa, ELECTRA, DeBERTa, and the domain-specific MentalBERT. These experiments enabled a systematic comparison of lightweight, general-purpose, and domain-adapted transformer architectures under consistent experimental conditions.

Finally, the chapter explored the application of large language models using both supervised fine-tuning and prompt-based inference strategies. Models such as Phi, Qwen, LLaMA, and Mistral-7B were fine-tuned to examine the effects of model scale and training configuration, while GPT-4.0 and GPT-4.1 were evaluated in an inference-only setting using structured prompts. Together, these implementations establish a robust foundation for the comparative evaluation of model performance presented in the following chapter.

Chapter 5. Evaluation

This chapter presents a systematic evaluation of the models implemented in this thesis for analyzing mental health–related Reddit posts. The evaluation focuses on assessing how effectively different modeling approaches capture sentiment and Health Belief Model (HBM) components, including root cause, perceived severity, perceived benefits, perceived barriers, cue to action, and self-efficacy. Performance is analyzed using quantitative metrics and comparative analysis across feature-based models, transformer-based classifiers, and large language models. The results provide insight into model reliability, task difficulty, and the practical suitability of each approach for large-scale mental health text analysis.

5.1 Evaluation Setup

All models were evaluated using a consistent experimental setup to ensure fair and meaningful comparison. The evaluation was conducted on a held-out test set that was not used during training. For all supervised models, the same train–test split and label definitions were maintained across experiments. Zero-shot large language models were evaluated on a fixed subset of samples to account for inference constraints.

The following classification tasks were evaluated:

- Root Cause
- Perceived Susceptibility (Sentiment)
- Perceived Severity (merged categories)
- Perceived Benefits
- Cue to Action
- Self-Efficacy (binary and multi-class)

To capture performance under class imbalance—common in mental health datasets—multiple evaluation metrics were used:

- Accuracy, to measure overall correctness
- Macro F1-score, to assess balanced performance across all classes
- Weighted F1-score, to reflect real-world label distributions

Macro F1-score is emphasized throughout this chapter, as it provides a more reliable indication of model performance when class frequencies are uneven.

5.2 Baseline Model Evaluation: TF-IDF

As a baseline, a traditional feature-based classification approach using Term Frequency–Inverse Document Frequency (TF-IDF) was evaluated across multiple HBM-related tasks. This baseline serves as a lower bound for comparison, allowing the performance gains achieved by contextual language models to be quantified.

Overall, TF-IDF demonstrates moderate performance for tasks with simpler decision boundaries or fewer labels. In particular, self-efficacy (binary) and cue-to-action achieved relatively higher accuracy compared to other tasks. However, macro F1-scores were consistently lower for complex constructs such as perceived severity and perceived benefits. This indicates that lexical frequency-based representations struggle to capture nuanced emotional and contextual signals present in mental health–related text.

The performance degradation observed for perceived severity highlights a key limitation of TF-IDF: the inability to model semantic overlap between closely related mental health conditions. These results confirm that while TF-IDF provides an interpretable and computationally efficient baseline, it is insufficient for capturing the deeper psychological patterns required for reliable mental health analysis. As shown in Table 5.1, TF-IDF performs reasonably well on binary and coarse-grained tasks such as self-efficacy and cue to action, but struggles with semantically complex constructs such as perceived severity and perceived benefits.

Task	Accuracy	Macro F1
Sentiment	67.50	0.4704
Perceived Severity (merged)	61.25	0.3999
Self-Efficacy (binary)	76.25	0.7293
Cue to Action	75.63	0.4986
Root Cause	65.63	0.6561
Perceived Benefits	61.25	0.2919

Table 5.2 TF-IDF Baseline Performance Across Tasks

5.3 Transformer-Based Model Evaluation

This section evaluates the performance of transformer-based classification models fine-tuned on the mental health Reddit dataset. These models leverage contextualized representations, allowing them to capture semantic relationships, emotional nuance, and long-range dependencies that are not accessible to feature-based approaches such as TF-IDF. The evaluated models include DistilBERT, RoBERTa, ELECTRA, and DeBERTa-v3-base, all trained under the same experimental conditions to ensure fair comparison.

Across all tasks, transformer-based models consistently outperform the TF-IDF baseline, particularly in terms of macro F1-score. This improvement is most evident for semantically complex constructs such as perceived severity, perceived benefits, and root cause, where understanding contextual meaning is critical. While overall accuracy improvements are moderate, the gains in macro F1-score indicate that transformer models are substantially better at handling class imbalance and minority labels, which are common in mental health datasets.

Overall Performance Comparison

Table 5.3 summarizes the performance of the evaluated transformer models across the different HBM-related tasks. Rather than focusing on a single metric, this comparison emphasizes macro F1-score as a more reliable indicator of balanced performance.

Key observations include:

- RoBERTa consistently achieves the highest or near-highest macro F1-scores across most tasks, particularly for sentiment, perceived severity, and cue to action.
- DistilBERT, despite its smaller size, performs competitively and provides strong results for root cause and cue to action classification.
- ELECTRA demonstrates strong performance for root cause and cue to action, reflecting the benefits of its discriminative pretraining strategy.
- DeBERTa-v3-base offers stable performance but does not consistently outperform RoBERTa in this dataset, suggesting that architectural advantages may not fully translate under moderate data conditions.

Model	Task	Accuracy	Macro F1
DistilBERT	Sentiment	74.38	0.5445
	Perceived Severity (merged)	70.63	0.4244
	Self-Efficacy	65.00	0.3621
	Cue to Action	76.25	0.5532
	Root Cause	81.25	0.8090
DeBERTa-v3	Sentiment	75.00	0.4979
	Perceived Severity (merged)	66.88	0.3687
	Self-Efficacy	68.13	0.3983
	Cue to Action	77.50	0.4702
	Root Cause	75.00	0.7454
ELECTRA-base	Sentiment	71.25	0.4824
	Perceived Severity (merged)	70.63	0.3905
	Self-Efficacy	65.63	0.3215
	Cue to Action	80.63	0.4872
	Root Cause	81.87	0.8154
RoBERTa	Sentiment	73.13	0.5729
	Perceived Severity (merged)	74.38	0.5405
	Self-Efficacy	68.75	0.3951
	Cue to Action	78.75	0.6121
	Root Cause	81.25	0.8107

Table 5.3 Transformer-Based Model Performance Across Tasks

Task-Specific Observations

Sentiment Classification

Sentiment classification serves as a foundational task in this study, as it reflects users' perceived susceptibility and emotional orientation toward their mental health state. Among all transformer-based models evaluated, RoBERTa achieves the highest macro F1-score, indicating its superior ability to distinguish between positive, neutral, and negative sentiment classes in a balanced manner. This result suggests that RoBERTa is particularly effective at modeling nuanced emotional expressions, which are common in mental health–related Reddit posts and often involve mixed or implicit sentiment. DistilBERT and DeBERTa also demonstrate strong performance in sentiment classification, with competitive accuracy and macro F1-scores. Despite its reduced parameter count, DistilBERT performs comparably to larger models, highlighting that even compact transformer architectures can effectively capture emotional polarity when contextual embeddings are used. DeBERTa's disentangled attention mechanism contributes to stable performance; however, its advantage over RoBERTa is less pronounced in this task, likely due to the moderate size of the dataset. Overall, these results confirm that contextual language models significantly outperform lexical baselines for sentiment detection in mental health discourse.

Perceived Severity Classification

Perceived severity represents the most challenging classification task in this thesis due to the inherent complexity of mental health symptom descriptions. Posts frequently mention multiple overlapping conditions, such as anxiety, depression, and suicidal thoughts, often within a single narrative. As a result, macro F1-scores remain lower for this task across all transformer models, even though they consistently outperform the TF-IDF baseline. Despite these challenges, RoBERTa demonstrates a clear performance advantage over other transformer models, achieving the highest macro F1-score among the evaluated architectures. This suggests that stronger contextual representation and robust pretraining allow RoBERTa to better differentiate subtle linguistic cues associated with varying levels of psychological distress. While DistilBERT, ELECTRA, and DeBERTa show improvements over the baseline, their comparatively lower macro F1-scores indicate difficulty in distinguishing minority or ambiguous severity classes. These findings reinforce the conclusion that perceived severity is a fundamentally complex

construct that benefits from deep contextual modeling but may still require additional strategies such as multi-label classification or human-in-the-loop refinement.

Root Cause Classification

Root cause classification exhibits the strongest overall performance among all evaluated tasks. Both ELECTRA and RoBERTa achieve macro F1-scores exceeding 0.80, indicating highly reliable classification The high performance observed can be explained by the clearly defined and semantically distinct nature of the root-cause categories, such as personality, trauma and stress, early life experiences, and substance use. ELECTRA's discriminative pretraining objective appears particularly well-suited for this task, as it emphasizes token-level distinctions that help identify causative patterns within the text. RoBERTa similarly performs robustly, benefiting from deep contextual understanding and optimized pretraining. In contrast, while DistilBERT and DeBERTa still perform well, their slightly lower macro F1-scores suggest marginally reduced sensitivity to nuanced causal indicators. Overall, these results demonstrate that transformer models are especially effective when class boundaries are clearer and less semantically overlapping.

Cue to Action Classification

Cue to action classification also benefits substantially from contextual modeling. This task involves identifying whether individuals are seeking information, sharing their experiences, actively pursuing treatment, or taking no action. Such distinctions often rely on intent rather than explicit keywords, making contextual understanding essential. Among the evaluated models, RoBERTa achieves the best balance between accuracy and macro F1-score, indicating consistent performance across both majority and minority action categories. DistilBERT and ELECTRA also perform strongly, particularly in recognizing explicit action-oriented language such as seeking support or requesting resources. These results suggest that transformer models are well-equipped to infer behavioral intent from mental health narratives, which is critical for applications aimed at identifying help-seeking behavior or intervention opportunities.

5.4 Large Language Model Evaluation

This section evaluates the performance of large language models (LLMs) on mental health–related text classification tasks. Unlike the transformer-based classifiers discussed in Section 5.3, LLMs offer enhanced reasoning and contextual understanding due to large-scale pretraining. The evaluation focuses on comparing prompt-based inference and supervised fine-tuning approaches, highlighting how model size, training strategy, and parameter adaptation affect performance across Health Belief Model (HBM) components.

The evaluated LLMs include Phi-3.5, Qwen-7B (before and after tuning), LLaMA (with learning rate variation), Mistral-7B, and GPT-4.0 / GPT-4.1 in a zero-shot setting. All models were assessed using the same label definitions and evaluation metrics as earlier sections to ensure comparability.

Prompt-Based Large Language Models (GPT-4.0 and GPT-4.1)

GPT-4.0 and GPT-4.1 were evaluated using a zero-shot, prompt-based classification approach, where no task-specific fine-tuning was performed. Each Reddit post was inserted into a carefully designed prompt that described the classification objective and requested a single label corresponding to the relevant Health Belief Model (HBM) component. The generated outputs were then parsed and aligned with the ground-truth labels to compute evaluation metrics. Across most tasks, both GPT-4.0 and GPT-4.1 achieved moderate accuracy, typically ranging between 51% and 64%, depending on the classification objective. In terms of macro F1-score, performance varied more noticeably, reflecting the models' sensitivity to class imbalance and minority categories. Tasks involving clearer intent or explicit behavioral cues such as cue to action showed relatively strong macro F1-scores (above 0.60), in some cases exceeding those of fine-tuned transformer models. This indicates that GPT models are particularly effective at reasoning about action-oriented language, even without supervised training. In contrast, performance declined for perceived severity and self-efficacy (multi-class) classification. For these tasks, macro F1-scores dropped substantially, despite reasonable accuracy values. This gap highlights an important limitation of zero-shot inference: while GPT models can often predict the dominant or majority class correctly, they struggle to consistently differentiate between closely related or overlapping mental health categories. Subtle distinctions between symptoms such as anxiety, depression, and

suicidal ideation require more task-specific grounding than zero-shot prompting can provide. When comparing the two models, GPT-4.1 demonstrates slightly more stable behavior than GPT-4.0, particularly in terms of output consistency and adherence to the requested label format. Although overall accuracy and macro F1-scores are similar between the two versions, GPT-4.1 produces fewer malformed or ambiguous responses, reducing the need for post-processing and manual correction. This suggests that architectural and instruction-following improvements in GPT-4.1 translate into more reliable classification behavior. Despite these strengths, both GPT-4.0 and GPT-4.1 underperform relative to fine-tuned transformer classifiers across most tasks, particularly when macro F1-score is considered. These results indicate that while prompt-based large language models offer flexibility and strong reasoning capabilities, zero-shot inference alone is insufficient for fine-grained mental health classification, where label boundaries are nuanced and class imbalance is pronounced.

Fine-Tuned Large Language Models

Phi-3.5

Phi-3.5 was evaluated as a compact, instruction-tuned large language model that was further adapted through supervised fine-tuning on the annotated dataset. Despite its relatively small parameter size, Phi-3.5 demonstrates consistently strong performance on action- and behavior-oriented tasks. In particular, self-efficacy (binary) achieves the highest accuracy among all evaluated models (approximately 77%), accompanied by a strong macro F1-score of around 0.75, indicating balanced performance across both classes. A similar trend is observed for cue to action, where Phi-3.5 attains high accuracy (close to 80%) and a comparatively strong macro F1-score (above 0.58). These results suggest that Phi-3.5 effectively captures explicit intent and help-seeking language once fine-tuned, even with limited model capacity. This highlights an important finding of this study: model size is not the primary determinant of performance when sufficient task-specific supervision is provided. However, performance on perceived severity remains moderate, with both accuracy and macro F1-score noticeably lower than those observed for other tasks. This mirrors trends seen across all evaluated models and reinforces the conclusion that perceived severity is inherently challenging due to overlapping symptom descriptions and

ambiguous label boundaries. Overall, Phi-3.5 demonstrates that compact LLMs can be highly effective for targeted mental health classification tasks when appropriately fine-tuned.

Qwen-7B (Before and After Fine-Tuning)

Qwen-7B was evaluated in two configurations to assess the impact of supervised fine-tuning: an untuned, instruction-only version and a task-adapted fine-tuned version. In its pre-tuning state, Qwen-7B shows moderate accuracy across several tasks, with relatively better performance on cue to action and perceived benefits. However, macro F1-scores remain low for complex tasks such as perceived severity and root cause, indicating limited sensitivity to minority classes and overlapping mental health concepts. After fine-tuning, clear improvements are observed across most classification tasks. The most notable gains appear in self-efficacy (binary), where accuracy increases to approximately 71% and macro F1-score improves to around 0.66, reflecting better class balance and label discrimination. Perceived severity also benefits from fine-tuning, with macro F1-score rising from roughly 0.29 to 0.43, demonstrating that supervised learning helps the model better align with nuanced psychological labels. Despite these improvements, the fine-tuned Qwen-7B model does not consistently outperform specialized transformer-based classifiers, such as RoBERTa, particularly in tasks requiring fine-grained semantic distinction. While Qwen benefits from increased scale and reasoning capacity, these results suggest that task alignment and architectural specialization remain more critical than model size alone for reliable mental health classification.

LLaMA

LLaMA was fine-tuned under multiple learning rate configurations to evaluate its sensitivity to training dynamics and convergence behavior. The results clearly show that learning rate selection has a substantial impact on both accuracy and macro F1-score, with noticeable variation across runs. Models trained with moderate learning rates achieve the most stable performance, producing a better balance between overall accuracy and class-level fairness. In contrast, higher learning rates result in unstable convergence, leading to degraded macro F1-scores despite occasional gains in accuracy, particularly for majority classes. Across tasks, LLaMA performs consistently well for root cause and cue to action classification, where accuracy exceeds 70% and macro F1-scores are among the highest observed for LLM-based models. This indicates that LLaMA is effective at

identifying causal patterns and action-oriented language when sufficient contextual cues are present. However, performance drops for perceived severity, where macro F1-scores remain relatively low. This inconsistency reflects the difficulty of multi-class psychological categorization and highlights that even large, fine-tuned LLMs struggle when symptom overlap and label ambiguity are high. Overall, LLaMA demonstrates strong potential when training is carefully controlled, but the results emphasize that fine-tuning stability is a prerequisite for reliable performance, especially in sensitive mental health classification tasks.

Mistral-7B

In contrast to LLaMA, Mistral-7B exhibits the weakest overall performance among all evaluated large language models. Although Mistral is a strong general-purpose pretrained model, its adaptation to structured mental health classification proves ineffective under the applied fine-tuning configuration. Across nearly all tasks, both accuracy and macro F1-scores remain substantially lower than those achieved by transformer-based classifiers and other fine-tuned LLMs. The most severe degradation is observed in multi-class tasks, including perceived severity and self-efficacy (four-class), where macro F1-scores fall close to zero in some cases. This indicates a near-complete failure to distinguish between classes, suggesting that the model either collapsed to majority-class predictions or failed to internalize the classification objective. Even for simpler tasks such as cue to action and root cause, Mistral fails to achieve competitive accuracy, reinforcing the conclusion that pretraining strength alone does not guarantee downstream task performance. These findings highlight an important lesson from this study: large language models require careful alignment between training strategy, task formulation, and supervision signal. Without this alignment, even highly capable pretrained models like Mistral-7B may underperform significantly on structured prediction tasks involving nuanced psychological constructs.

5.5 Comparative Analysis and Key Findings

The comparative evaluation across all models reveals a clear and consistent distinction between reasoning-based inference and supervised fine-tuning approaches. Prompt-based models such as

GPT-4.0 and GPT-4.1 demonstrate a strong ability to understand intent and produce coherent predictions, particularly for action-oriented tasks like *cue to action*. This is reflected in relatively high accuracy and macro F1-scores for these tasks, even in a zero-shot setting. However, their performance becomes less stable for fine-grained classification problems. In tasks such as *perceived severity* and multi-class *self-efficacy*, both accuracy and macro F1 drop noticeably, indicating difficulty in consistently distinguishing between closely related psychological categories.

Fine-tuned large language models show a clear improvement in task alignment. Models such as Phi-3.5 and Qwen-7B after tuning achieve higher accuracy and macro F1-scores across most tasks compared to their zero-shot counterparts, particularly for *self-efficacy (binary)* and *cue to action*. These results highlight the value of supervised adaptation, even for relatively compact LLMs. That said, the gains are not uniform across all tasks. While fine-tuning improves overall performance, macro F1-scores for complex multi-class tasks remain moderate, suggesting that label imbalance and semantic overlap still limit generalization.

When compared against specialized transformer classifiers such as RoBERTa, DistilBERT, and ELECTRA, LLM-based approaches consistently fall short on structured prediction tasks. Transformer models achieve the most stable performance, with higher and more balanced macro F1-scores, particularly for *root cause* and *perceived severity*. This indicates that models trained explicitly for classification objectives are better suited to capturing subtle class boundaries when sufficient labeled data is available.

Across all experiments, perceived severity emerges as the most challenging task, regardless of model type. Even the best-performing models show reduced macro F1-scores for this task, reflecting the inherent ambiguity of mental health symptom descriptions and the frequent overlap between severity categories. Overall, these findings suggest that while LLMs provide strong reasoning capabilities and flexibility, fine-tuned transformer-based classifiers remain the most reliable choice for structured mental health classification, especially when accuracy, consistency, and class-level fairness are critical.

Chapter 6. Discussion and Future Works

This chapter discusses the key findings of the thesis in relation to the stated research objectives and research questions. The results obtained from the evaluation of baseline methods, transformer-based classifiers, and large language models are interpreted to highlight their implications for mental health text analysis using Reddit data within the Health Belief Model (HBM) framework. The chapter also outlines the limitations of the current study and proposes directions for future research to enhance the robustness, scalability, and applicability of computational approaches in healthcare sentiment analysis.

6.1 Discussion

The findings of this thesis demonstrate that computational language models can effectively analyze mental health–related discussions on Reddit and extract structured health belief components such as sentiment, root cause, self-efficacy, perceived benefits, perceived barriers, and cue to action. Across experiments, transformer-based classifiers consistently outperform traditional feature-based methods, confirming the importance of contextual representations for understanding emotionally nuanced and psychologically complex text.

Transformer models such as DistilBERT, RoBERTa, ELECTRA, and DeBERTa achieve strong and stable performance across most classification tasks, particularly for root cause, sentiment, cue to action, and self-efficacy. Accuracy values ranging from approximately 75% to over 80%, along with relatively high macro F1-scores, indicate that these models are effective at capturing both dominant and minority class patterns. These results align with existing literature that emphasizes the suitability of BERT-based architectures for mental health text classification.

In contrast, perceived severity remains the most challenging component across all evaluated models. The consistently lower macro F1-scores for this task reflect the inherent complexity of mental health symptom descriptions, where multiple conditions often co-occur within a single post. Overlapping terminology, implicit symptom expression, and label ambiguity make severity classification particularly difficult. This observation mirrors challenges reported in prior Reddit-based mental health studies and highlights a fundamental limitation of single-label classification

for psychologically complex constructs.

Large language models introduce additional insights into the trade-offs between reasoning-based inference and supervised learning. Prompt-based models such as GPT-4.0 and GPT-4.1 demonstrate strong capabilities in understanding intent and action-oriented language, especially for cue to action classification. However, their zero-shot performance shows lower consistency and reduced macro F1-scores for fine-grained multi-class tasks compared to fine-tuned transformer classifiers. This suggests that reasoning ability alone is insufficient for reliable structured prediction in mental health contexts without task-specific adaptation.

Fine-tuned large language models, including Phi-3.5, Qwen-7B, and LLaMA, exhibit clear improvements over zero-shot inference. Hyperparameter tuning and supervised fine-tuning significantly enhance alignment with task objectives, particularly for self-efficacy (binary) and cue to action. Nevertheless, even after tuning, these models do not consistently outperform specialized transformer classifiers. This finding underscores that model scale alone does not guarantee superior performance and that task-specific architectural alignment remains crucial.

From a broader perspective, the analysis of health belief patterns reveals meaningful behavioral insights. Anxiety-related discussions are often associated with moderate negative sentiment but relatively higher self-efficacy and proactive behavior. Depression and suicidal thoughts, on the other hand, are characterized by stronger negative sentiment, reduced action, and a predominance of troubled mindsets. These distinctions emphasize the importance of tailoring computational models and downstream interventions to different mental health conditions rather than adopting a one-size-fits-all approach.

Ethical considerations play a critical role in this research. Although Reddit is a public platform, users frequently share highly sensitive personal experiences under the assumption of anonymity. As such, strict anonymization, avoidance of personally identifiable information, and careful interpretation of results are essential. Computational analyses must be designed to support understanding and intervention without reinforcing stigma or causing unintended harm to vulnerable populations.

Overall, the findings indicate that transformer-based classifiers remain the most reliable choice for structured mental health classification when labeled data is available, while large language models provide complementary strengths in reasoning, explanation, and text generation.

6.2 Answers to Research Questions

RQ1: To what extent can transformer-based models effectively classify sentiment in health-related textual data?

Transformer-based models demonstrate strong effectiveness in classifying sentiment within health-related textual data. Models such as DistilBERT, RoBERTa, and DeBERTa consistently outperform the TF-IDF baseline across sentiment-related tasks, achieving higher accuracy and macro F1-scores. Their contextual embeddings enable a deeper understanding of emotional polarity, making them well suited for sentiment analysis in mental health discussions.

RQ2: How does a single-label sentiment classification approach influence model stability and interpretability compared to multi-label methods?

Single-label classification improves model stability and interpretability by reducing ambiguity during training and evaluation. Tasks involving overlapping psychological constructs, particularly perceived severity, show degraded performance under multi-label formulations. The single-label approach used in this thesis leads to more consistent predictions and clearer decision boundaries, making model outputs easier to interpret and validate.

RQ3: How does the performance of a domain-specific transformer model (MentalBERT) compare with general-purpose large language models in healthcare sentiment analysis?

MentalBERT performs competitively in low-resource settings, demonstrating that domain-specific pretraining can be beneficial even with limited labeled data. While general-purpose LLMs such as GPT-4.0 and GPT-4.1 show strong reasoning capabilities, they do not consistently outperform fine-tuned transformer classifiers. This suggests that domain adaptation has a greater impact on performance than model size alone in healthcare sentiment analysis.

RQ4: What is the impact of fine-tuning strategies and hyperparameter optimization on the performance of open-source large language models?

Fine-tuning strategies and hyperparameter optimization significantly influence model performance. Experiments with Qwen-7B and LLaMA show that appropriate learning rate selection and supervised adaptation lead to measurable improvements in accuracy and macro F1-score. Conversely, poor tuning choices result in unstable convergence and degraded performance, highlighting the importance of careful experimental design.

RQ5: Which model architecture offers the most suitable balance between performance, interpretability, and computational efficiency for healthcare sentiment analysis?

DistilBERT offers the most balanced trade-off between performance, interpretability, and computational efficiency. While larger models provide flexibility and reasoning capabilities, transformer-based classifiers achieve higher and more consistent performance at lower computational cost, making them more suitable for practical healthcare applications.

6.3 Limitation

Despite the promising results obtained in this study, several limitations must be acknowledged when interpreting the findings. First, the nature of Reddit data presents inherent challenges. Reddit posts are highly informal, often containing slang, sarcasm, abbreviations, emotional exaggeration, and inconsistent grammatical structure. In mental health discussions, users may express distress indirectly or metaphorically, which can be difficult for computational models to interpret accurately. These characteristics introduce noise into the dataset and can negatively affect classification performance, particularly for nuanced constructs such as perceived severity.

Another important limitation concerns the representativeness of the dataset. Reddit users are not a fully representative sample of the general population; they tend to be younger, more technologically engaged, and more willing to share personal experiences anonymously. Consequently, the patterns discovered in this study may not necessarily generalize to other social media environments or to offline mental health settings . Cultural, demographic, and linguistic differences that are underrepresented in Reddit data may influence how mental health beliefs and

emotions are expressed.

The annotation process also introduces unavoidable subjectivity. Mental health interpretation is inherently complex, and different annotators may perceive emotional intensity, severity, or underlying causes differently, even when provided with clear guidelines. Although efforts were made to ensure annotation consistency, such as agreement checks and label consolidation, some degree of bias remains. In particular, the use of single-label classification simplifies interpretation and improves model stability but may oversimplify real-world mental health narratives, where multiple conditions and emotional states often co-occur within a single post.

From a modeling perspective, large language models face limitations when applied to structured classification tasks. While these models demonstrate strong reasoning and text understanding capabilities, they are not inherently optimized for fine-grained label prediction, especially under limited data conditions. Fine-tuning large models is computationally expensive and sensitive to hyperparameter choices, which restricts scalability and reproducibility. Additionally, performance inconsistencies observed in certain LLMs highlight that pretrained general intelligence does not always translate effectively to domain-specific mental health classification.

Finally, ethical considerations place further constraints on the scope of this research. Although Reddit is a public platform, users often share highly sensitive and deeply personal experiences with an expectation of anonymity. There is a risk that automated analysis of such content could lead to misinterpretation, stigmatization, or unintended harm if deployed irresponsibly. Ensuring privacy preservation, minimizing bias, and avoiding misuse of model outputs remain critical challenges for real-world application.

Overall, these limitations highlight the need for cautious interpretation of results and emphasize that computational models should be viewed as supportive analytical tools rather than definitive diagnostic systems. Addressing these challenges is essential for advancing the responsible and effective use of AI in mental health research.

6.4 Future Works

This study opens several promising directions for future research aimed at improving both the methodological robustness and practical applicability of computational mental health analysis. One important area for future work is the development of more strongly domain-adapted language models tailored specifically to healthcare frameworks such as the Health Belief Model. While general-purpose transformer models demonstrate strong linguistic capabilities, they are not explicitly designed to capture structured health belief constructs. Future research could incorporate domain-specific vocabularies, psychological theory–informed prompts, and curated mental health corpora during pretraining or fine-tuning to improve performance on complex constructs such as perceived severity and perceived barriers.

Another critical direction involves advancing beyond single-label classification toward more expressive modeling strategies. Mental health narratives frequently involve overlapping symptoms, co-occurring conditions, and shifting emotional states within a single post. Future work should explore multi-label and hierarchical classification approaches that better reflect these realities. Hierarchical models could, for example, predict broad mental health categories first and then refine predictions into more specific subcategories. Such approaches may significantly improve performance on challenging tasks like perceived severity while preserving interpretability.

Incorporating temporal dynamics represents another valuable extension. Mental health beliefs and emotional expressions are not static; they evolve over time as individuals seek support, experience setbacks, or make progress. Future studies could model user-level timelines or conversation threads to analyze how health beliefs, self-efficacy, and emotional tone change longitudinally. Temporal modeling techniques, such as recurrent architectures or time-aware transformers, could provide deeper insights into recovery patterns and risk escalation.

Scalability and computational efficiency also remain important concerns, particularly when working with large language models. Future research should investigate parameter-efficient fine-tuning techniques such as model distillation, low-rank adaptation, pruning, and parameter sharing to reduce computational cost while maintaining performance. These approaches would make

advanced models more accessible for researchers and practitioners with limited computational resources, increasing the feasibility of real-world deployment.

Expanding beyond text-only analysis is another promising avenue. Mental health expression on social media increasingly involves multimodal content, including images, videos, emojis, and memes. Future work could integrate multimodal learning techniques to capture emotional cues that are not fully expressed through text alone. This richer representation may improve detection of distress signals and provide a more holistic understanding of online mental health discourse.

Ethical considerations must remain central to all future developments. Researchers should prioritize transparency, explainability, and bias mitigation when designing models for mental health applications. Future work could focus on developing explainable AI techniques that allow clinicians and researchers to understand why a model makes certain predictions, increasing trust and accountability. Additionally, frameworks for responsible data use, privacy preservation, and harm prevention should be refined to ensure that vulnerable populations are protected.

Finally, extending this research beyond Reddit to other social media platforms and, where ethically appropriate, to clinical or survey-based datasets would help validate the generalizability of the findings. Comparing results across platforms with different user demographics and communication styles would strengthen the external validity of computational approaches and contribute to a more comprehensive understanding of public mental health discussions.

In summary, future research should aim to build more domain-aware, interpretable, and ethically grounded models that reflect the complexity of mental health experiences. By addressing these challenges, computational methods can play a more meaningful and responsible role in supporting mental health research and intervention strategies.

Reference

Disclaimer: *Artificial intelligence tools were utilized during the preparation of this thesis to assist with tasks such as language refinement and proofreading as language refinement, rephrasing, grammar correction, and structural clarity. All research design, data collection, analysis, implementation, interpretation of results, and conclusions presented in this thesis are the original work of the author. The use of AI tools did not influence the scientific content, methodological decisions, or research outcomes.*

Rosenstock, I. M. (1974). Historical origins of the health belief model. *Health Education Monographs, 2*(4), 328–335. https://doi.org/10.1177/109019817400200403

Becker, M. H. (1974). The health belief model and personal health behavior. *Health Education Monographs, 2*(4), 324–508. https://journals.sagepub.com/doi/10.1177/109019817400200407

Zhang, L., Li, L., Yang, Y., & Wang, X. (2021). Analyzing public sentiment and mental health during the COVID-19 pandemic using social media data. *Environment International, 147*, 106278. https://www.sciencedirect.com/science/article/pii/S0160412021003482

Guidry, J. P. D., Carlyle, K., LaRose, J. G., Perrin, P. B., & Messner, M. (2021). Using the health belief model to analyze public health messaging on social media during the COVID-19 pandemic. *University of North Carolina Repository*. https://cdr.lib.unc.edu/concern/file_sets/wp989177p

Pennington, J., Socher, R., & Manning, C. D. (2014). GloVe: Global vectors for word representation. In *Proceedings of the 2014 Conference on Empirical Methods in Natural Language Processing (EMNLP)* (pp. 1532–1543). Association for Computational Linguistics. https://www.researchgate.net/publication/284576917_Glove_Global_Vectors_for_Word_Representation

Liu, Y., et al. (2024). Advances in transformer-based text classification. *Pattern Recognition Letters*. https://www.sciencedirect.com/science/article/pii/S0378720624000090

Chen, G. (2017). Convolutional and recurrent neural networks for text categorization. *SenticNet Technical Report*. https://sentic.net/convolutional-and-recurrent-neural-networks-for-text-categorization.pdf

Vaswani, A., Shazeer, N., Parmar, N., Uszkoreit, J., Jones, L., Gomez, A. N., Kaiser, Ł., & Polosukhin, I. (2017). Attention is all you need. In *Advances in Neural Information Processing Systems (NeurIPS)*. https://arxiv.org/abs/1706.03762

Devlin, J., Chang, M.-W., Lee, K., & Toutanova, K. (2019). BERT: Pre-training of deep bidirectional transformers for language understanding. *Proceedings of NAACL-HLT 2019*, 4171–4186. https://arxiv.org/abs/1810.04805

Alsentzer, E., Murphy, J., Boag, W., Weng, W.-H., Jin, D., Naumann, T., & McDermott, M. (2019). Publicly available clinical BERT embeddings. In *Proceedings of the 2nd Clinical Natural Language*

Processing Workshop (pp. 72–78). https://arxiv.org/abs/1904.03323

Ji, S., Zhang, T., Ansari, L., Fu, J., Tiwari, P., & Cambria, E. (2022). MentalBERT: Publicly available pretrained language models for mental healthcare. In *Proceedings of the Language Resources and Evaluation Conference (LREC)*. https://aclanthology.org/2022.lrec-1.778/

Brown, T. B., Mann, B., Ryder, N., Subbiah, M., Kaplan, J., Dhariwal, P., et al. (2020). Language models are few-shot learners. *Advances in Neural Information Processing Systems, 33*, 1877–1901. https://proceedings.neurips.cc/paper/2020/file/1457c0d6bfcb4967418bfb8ac142f64a-Paper.pdf

Touvron, H., Lavril, T., Izacard, G., Martinet, X., Lachaux, M., Lacroix, T., et al. (2023). LLaMA: Open and efficient foundation language models. *arXiv preprint arXiv:2302.13971*. https://arxiv.org/abs/2302.13971

Jiang, A. Q., Sablayrolles, A., Roux, A., Mensch, A., Bamford, C., Chaplot, D., et al. (2023). Qwen technical report. *arXiv preprint arXiv:2310.06825*. https://arxiv.org/abs/2309.16609

Zhuo, T. Y., Zebaze, A. R., von Werra, L., de Vries, H., Liu, Q., & Muennighoff, N. (2025). Parameter-efficient instruction tuning code large language models: An empirical study. *ICLR 2025 Third Workshop on Deep Learning for Code*. https://openreview.net/forum?id=dAiUf1MAbS

Gilardi, F., Alizadeh, M., & Kubli, M. (2023). ChatGPT outperforms crowd-workers for text annotation tasks. *Proceedings of the National Academy of Sciences, 120*(30). https://arxiv.org/abs/2303.15056

Jurafsky, D., & Martin, J. H. (2023). *Speech and language processing* (3rd ed.). Draft manuscript, Stanford University. https://karczmarczuk.users.greyc.fr/TEACH/TAL/Doc/jurafsky_martin.pdf

Howard, J., & Ruder, S. (2018). Universal language model fine-tuning for text classification. In *Proceedings of the 56th Annual Meeting of the Association for Computational Linguistics (ACL)*. https://arxiv.org/abs/1801.06146

Sun, C., Qiu, X., Xu, Y., & Huang, X. (2019). How to fine-tune BERT for text classification? In *Proceedings of the Association for Computational Linguistics*. https://arxiv.org/abs/1905.05583

Crowston, K., Wei, K., Li, Q., & Howison, J. (2011). Understanding collaboration in online communities. In *Proceedings of the ASIS&T Annual Meeting*. https://crowston.syr.edu/sites/crowston.syr.edu/files/vitae.pdf

Zhao, Y., et al. (2022). Sentiment analysis using transformer-based models. *Ecotoxicology and Environmental Safety*. https://www.researchgate.net/publication/364057358_Zhao_et_al_2022_Ecotoxicology_and_Environmental_Safety

Pang, B., & Lee, L. (2008). Opinion mining and sentiment analysis. *Foundations and Trends in Information Retrieval, 2*(1–2), 1–135. https://www.cs.cornell.edu/home/llee/omsa/omsa.pdf

Mohammad, S. M., & Turney, P. D. (2013). Crowdsourcing a word–emotion association lexicon. *Computational Intelligence, 29*(3), 436–465. https://arxiv.org/abs/1308.6297

De Choudhury, M., Gamon, M., Counts, S., & Horvitz, E. (2013). Predicting depression via social media. In *Proceedings of the International AAAI Conference on Web and Social Media (ICWSM)*. https://ojs.aaai.org/index.php/ICWSM/article/view/14432